LVNi绿零®

AILIPUSH®

LVNI绿零北京分公司
地址：北京市丰台区马连道高楼村49号院（永州市政府驻京联络处）
电话：13580404292 （唐先生）

LVNI绿零长沙分公司
地址：中国（湖南）自由贸易试验区长沙片区路南段77号东方智造港C6栋606室
电话：15112104162（陈先生）

LVNI绿零成都分公司
地址：成都市新都区兴城大道1988号新物联港食品包装机械交易中心C馆2楼
电话：19950292823（骆女士）

LVNI绿零湖南生产基地
地址：湖南省永州市冷水滩区经济技术开发区建业路
电话：18928736087（邓先生）

LVNI绿零广州总部（营销总部）
地址：广州市番禺区南村镇兴南大道798号城业大厦701室
电话：020-28989367 15112104164（曾先生） 传真：020-23838336
邮件：2235659404@qq.com
官网：www.lvni.net

LVNI Overseas Business Department
Add.: No. 701, Building Chengye Skycraper, Panyu District, Guangzhou City
Contact: Maggie
Mobile/Wechat/Whatsapp: +8618927583976
Email: sales1@lvni-greenlife.com
Web: www.lvnifridge.com
Alibaba：https://greenlifehotel.en.alibaba.com

Service Hotline: 400-166-8839

Note: The company reserves the right to change product specifications, models, appearance and functions without prior notice, please refer to the actual product for details.

绿零科技产品画册

LVNI TECH. CATALOGUE

绿零微信公众号
LVNi WeChat Official Account

GREENLIFE
BE WITH YOU

FAN-COOLING
REFRIGERATOR
PICK LVNI

绿生活▪零距离 风冷冷柜选绿零

LVNI Technology/绿零科技

公司概况

绿零科技（广州）总部成立于2011年，注册资本1000 万元，现有员工150人，是一家以中高端商厨风冷冷柜、冷 链柜、智能冷柜、星级酒店和单位厨房设备工程解决方案为 主，集科研、设计、生产、销售、贸易于一体的高新技术企业。公司目前公司目前拥有广州总部，长沙全球运营中心，永州智造中心，北京分公司，上海分公司，成都分公司以及位于湖南省永州市经济技术开发区3万平米的商厨冷柜制造基地。

公司产品

公司的产品囊括商厨节能风冷冷柜、自动售货机、自动奶茶机、冷库、生鲜冷链和非标定制冷柜等，主要服务于酒店、餐饮和高端会所、智能家居、生物科技、农业产品等领域。目前持有“LVNI绿零”、“AILIPUSH”、“赛零斯”、“睡鲨”四大品牌。和全球60多个国家和地区有贸易往来，出口总量不断增加，与国内外诸多优质品牌客户保持合作伙伴关系。

发展历程

13 年风雨兼程，公司持续深耕商用冷柜领域，发展势头极为迅猛，先后成立了广州艾力普斯制冷设备有限公司。

（2013 年4月）成立冷柜智造工厂、上海绿零制冷科技有限公司；

（2016 年1月）成立上海分公司、北京绿零智能设备有限公司；

（2016 年3月）成立北京分公司、成都分公司；

（2017 年7月）湖南分公司；

（2018 年12月）湖南绿零智能科技股份有限公司；

（2019 年9月）成立湖南智造工厂，占地50 亩；

（2021 年4月）深圳分公司；

（2024 年3月）长沙全球运营中心。

绿零科技已经发展成为集商厨风冷冷柜研发、生产和销售于一体的综合性企业，致力为客户提供有竞争力的商厨设备解决方案和服务，是全球众多知名酒店的重要供应商。

“LVNI 绿零"已经成为商厨冷柜全球代表性品牌之一。

绿零科技以创建全球知名企业和知名品牌为最高使命，目前已在湖南股权所挂牌，将争取2030年在北交所IP0上市。

研发创新

绿零科技一直将研发创新做为核心竞争力来打造，致力为人们提供科技、绿色、节能的最好产品，为广大用户提供智能共享的最优服务。为满足不同类型客户的需求，公司不断创新，自2015年陆续推出“节能冷柜"、“物联网风冷冷柜”、“个性化定制冷柜”、“变频冷柜”、“智能留样柜”、“自动奶茶机”等领域的解决方案，围绕客户的需求和技术领先持续创新，与各行业伙伴保持开放性合作，持续为客户创造价值。

公司目前拥有9项发明专利、23项实用性专利，自主研发的模块化机组，拥有装卸方便、节省空间、制冷快速、节电降损等特点。公司核心产品均具有自主知识产权，已经通过20多项国内外认证，包括ISO三体系、食品接触产品安全、食品接触产品卫生、一级能效等级、节能认证、ETL、3C、CE、ROHS、MSDS、SASO等认证。质量检测把控方面，设有独立测试中心，测试设备种类齐全，管理规范，要求严苛，产品及零部件均参考国际标准进行设计和检测，保证产品的安全性和稳定性。

公司荣誉

绿零科技先后荣膺“湖南省省AAA级信用企业”、“广东省著名品牌"、“国家高新企业"、等多项殊荣，湖南绿零智能科技股份有限公司先后荣获“高新技术企业"、“A级纳税企业”、“AAA级信用企业”、“湖南省专精特新小巨人企业"、“湖南省级企业技术中心”、2022年度“湖南省省级工业新产品”、“湖南省两化融合管理体系贯标试点企业”、“湖南省省级工业新产品”、“省级绿色工厂”等殊荣。

企业文化

价值观：自强共创，快乐共赢。
企业使命：打造绿色品牌，创享智能科技，提供有竞争力的商厨设备
解决方案与服务。
企业愿景：成为被信赖的全球化企业。
企业模式：物联网+品牌智造+平台服务。
服务理念：绿生活，零距离。
管理理念：遵法而人性化，团结而自立化。
品牌传播语：风冷冷柜选绿零

LVNI Technology

COMPANY OVERVIEW

LVNi Intelligent (Guangzhou) headquarters was established in 2011,Registered capital 10 million yuan.Currently has 150 employees, It is a high-tech company focusing on mid-to-high-end commercial kitchen air-cooled freezers, cold chain cabinets, smart freezers, star hotels and unit kitchen equipment engineering solutions, integrating scientific research, design, production, sales and trade.

COMPANY PRODUCTS

The company's products include commercial kitchen energy-saving air-cooled freezers, vending machines, automatic milk tea machines, cold storage, fresh food cold chain and non-standard customized freezers, etc. Mainly serving hotels, restaurants and high-end clubs, smart homes, biotechnology, agricultural products and other fields. Currently, we holds four major brands: "LVNI Green Zero", "AILIPUSH", "Sailings" and "Sleeping Shark". And we have trade relations with more than 60 countries and regions around the world, its total export volume continues to increase, and it maintains partnerships with many high-quality brand customers at home and abroad.

DEVELOPMENT PATH

After 13 years of ups and downs, the company continued to delve into the field of commercial refrigerators and developed extremely rapidly. It successively established Guangzhou ALIPUSH Refrigeration Equipment Co., Ltd.(April 2013) Established the freezer intelligent manufacturing factory and Shanghai LVNi Refrigeration Technology Co., Ltd.;(January 2016) Shanghai branch and Beijing LVNi Intelligent Equipment Co., Ltd. were established;(March 2016) Established Beijing Branch and Chengdu Branch;
(July 2017) Hunan Branch;(December 2018) Hunan LVNi Intelligent Technology Co., Ltd.;
(September 2019) Established Hunan Intelligent Manufacturing Factory, covering an area of 50 acres;
(April 2021) Shenzhen Branch;
(March 2024) Changsha Global Operations Center
LVNi Intelligent has developed into a comprehensive enterprise integrating the research and development, production and sales of commercial kitchen air-cooled freezers. It is committed to providing customers with competitive commercial kitchen equipment solutions and services. It is an important supplier to many well-known hotels around the world.
"LVNi " has become one of the world's representative brands of commercial kitchen refrigerators.
LVNi Intelligent has the highest mission of creating world-renowned enterprises and well-known brands. It is currently listed on the Hunan Equity Exchange and will strive to be IP0± listed on the Beijing Stock Exchange in 2030.

INNOVATION

Green Zero Technology has always regarded R&D and innovation as its core competitiveness, and is committed to providing people with the best technological, green, and energy-saving products, and providing users with the best intelligent sharing services. In order to meet the needs of different types of customers, the company continues to innovate. Since 2015, it has successively launched "energy-saving freezers", "Internet of Things air-cooled freezers", "personalized custom freezers", "variable frequency freezers", "intelligent sample retention cabinets", " Solutions in fields such as "automatic milk tea machine", We will continue to innovate around customer needs and technological leadership, maintain open cooperation with partners in various industries, and continue to create value for customers.
The company currently has 9 invention patents and 23 practical patents. The independently developed modular unit has the characteristics of convenient loading and unloading, space saving, fast refrigeration, energy saving and loss reduction. The company's core products all have independent intellectual property rights and have passed more than 20 domestic and foreign certifications, including ISO three systems, food contact product safety, food contact product hygiene, first-level energy efficiency rating, energy saving certification, ETL, 3C, CE, ROHS, MSDS , SASO and other certifications. In terms of quality inspection and control, we have an independent testing center with a complete range of testing equipment, standardized management, and strict requirements. Products and components are designed and tested with reference to international standards to ensure product safety and stability.

HONOR

LVNi Intelligent has won many awards including "Hunan Provincial AAA Credit Enterprise", "Guangdong Provincial Famous Brand", "National High-tech Enterprise", etc. Hunan Green Zero Intelligent Technology Co., Ltd. has successively won the titles of "High-tech Enterprise", "High-tech Enterprise" and "National High-tech Enterprise". "A-level tax-paying enterprise", "AAA-level credit enterprise", "Hunan Province's specialized and new small giant enterprise", "Hunan Province's Enterprise Technology Center", "Hunan Province's Provincial-level Industrial New Products" in 2022, "Hunan Province's Two "Pilot Enterprise for the Implementation of Standards for the Integrated Management System", "Provincial New Industrial Products of Hunan Province", "Provincial Green Factory" and other honors

COMPANY CULTURE

Values: Self-reliance and joint creation, happiness and win-win.
Corporate mission: Create a green brand, create and enjoy intelligent technology, and provide competitive commercial kitchen equipment Solutions and Services.
Corporate Vision: To become a trusted global enterprise.
Enterprise model: Internet of Things + Intelligent Brand Manufacturing + Platform Services.
Service concept: green life, zero distance.
Management philosophy: comply with the law and be humane, unite and be self-reliant.
Brand slogan: Fan-cooling refrigerator pick LVNi

Related certificates/相关证书

绿零集团官网 LVNI Group Website：www.lvni.net

LVNI overseas official website：www.lvnifridge.com

LVNI Alibaba International: https://greenlifehotel.en.alibaba.com

01 B系列
B SERIES

S系列B款高身风冷冷柜 01
S Series B Air-cooled Upright Chiller & Freezer

S系列B款卧式风冷冷柜 04
S Series B Air-cooled Counter Chiller & Freezer

S系列B款吧台风冷冷柜 07
S Series B Air-cooled Bar Fridge

11 G系列
G SERIES

S系列G款商用风冷冷柜 11
S Series G Air-cooled Upright Chiller & Freezer

S系列G款卧式风冷冷柜 14
S Series G Air-cooled Counter Chiller & Freezer

S系列G款立式插盘风冷冷柜 17
S Series G Air-cooled Upright Plug-in Chiller & Freezer With Trays

S系列G款卧式披萨风冷冷柜 20
S Series G Air-cooled Pizza Refrigerator

S系列G款卧式沙拉风冷冷柜 21
S Series G Air-cooled Salad Refrigerator

台上式沙拉台 22
Countertop Salad Table

S系列G款卧式抽屉风冷冷柜 23
S Series G Air-cooled Counter Chiller & Freezer

25 TG系列
TG SERIES

TG款高身雪柜系列 25
Tg Series Air-cooled Upright Chiller & Freezer

TG款平台雪柜系列 28
Tg Series Air-cooled Counter Chiller & Freezer

31 GN系列
GN SERIES

GN款高身雪柜系列 31
Gn Series Air-cooled Upright Chiller & Freezer

GN款平台雪柜系列 34
Gn Series Air-cooled Counter Chiller & Freezer

37 US系列
US SERIES

US款高身雪柜系列 37
Us Series Air-cooled Upright Chiller & Freezer

US款平台雪柜系列 39
Us Series Air-cooled Counter Chiller & Freezer

41 宴会冷、热柜系列
BANQUET CART CHILLER & WARMER

43 炉台柜系列
CHEF BASE REFRIGERATOR SERIES

45 速冻柜系列
BLAST FREEZER SERIES

速冻柜-40°C 45
Blast Freezer -40°C

深冷(风冷)速冻柜-80°C 49
Blast Freezer -80°C

51 推入雪柜系列
PUSH-IN FRIDGE & FREEZER SERIES

53 饮料展示柜系列
BEVERAGE COOLER SERIES

55 展示柜系列
DISPLAY CABINET SERIES

红酒展示柜系列 55
Wine Fridge Display

饮料展示柜系列 57
Beverage Display

59 冰淇淋展示柜系列
ICE CREAM SHOWCASE SERIES

落地式单排冰淇淋展示柜 59
SINGLE ROW ICE CREAM SHOWCASE

冰淇淋展示柜 61
Gelator Showcase Freezer

63 蛋糕柜系列
CAKE DISPLAY SERIES

65 寿司展示柜系列
SUSHI DISPLAY CABINET SERIES

67 风幕柜系列
AIR CURTAIN CABINET SERIES

69 牛肉展示柜系列
BEEF DISPLAY CABINET SERIES

牛肉展示柜 71
Beef Display Cabinet Series

牛肉熟成柜 72
Beef Aging Cabinet Series

69 定制系列
CUSTOMIZED SERIES

晾鸭风干柜 73
Duck Drying Cabinet

烧腊柜 74
Roast Meat Cabinet

发酵箱 75
Proofer

解冻柜 76
Thawing Cabinet

储鱼柜 77
Fish Storage Cabinet

冰台 78
Ice Platform

挂墙柜 79
Wall Mounted Cabinet

冻眠速冻柜(瞬冻柜) 80
Liquidness Blast Freezer

S系列B款高身雪柜
S SERIES B AIR-COOLED UPRIGHT CHILLER & FREEZER

可拆卸过滤网设计
Detachable dust filter

①冷凝器过滤网可拆卸设计
②方便日常清洁或维护

品牌压缩机
Wanbao compressor

①高效率 ②低能耗 ③低维修率

智能温控器
Smart thermostat

①数字温控 ②精准控温 ③精确到0.1°C

风循环制冷
Fierce fan cooling circulation

①风冷无霜 ②制冷快速 ③冷气均匀

加厚可调层架
Thickened adjustable shelf

①可调节层架 ②灵活掌控空间

圆角内胆
Fillet liner

①圆角内胆 ②方便储存 ③易清洁

360°万向轮脚
360 ° universal wheel foot

①带刹车万向轮脚 ②方便移动又稳固

自动蒸发水冷凝器
Auto water evaporation system, no need drainage

①自动蒸发 ②无需排水口

S系列B款高身雪柜
S SERIES B AIR-COOLED UPRIGHT CHILLER & FREEZER

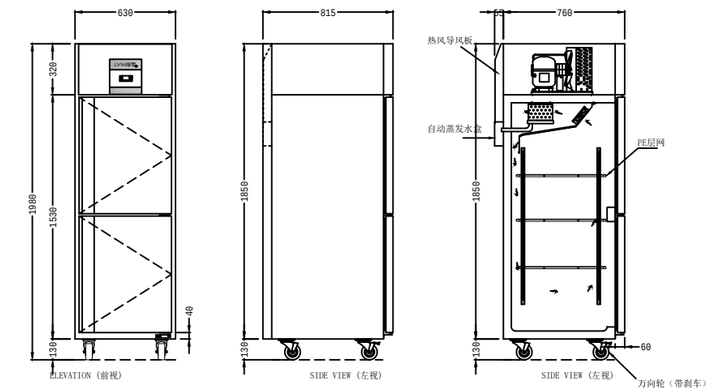

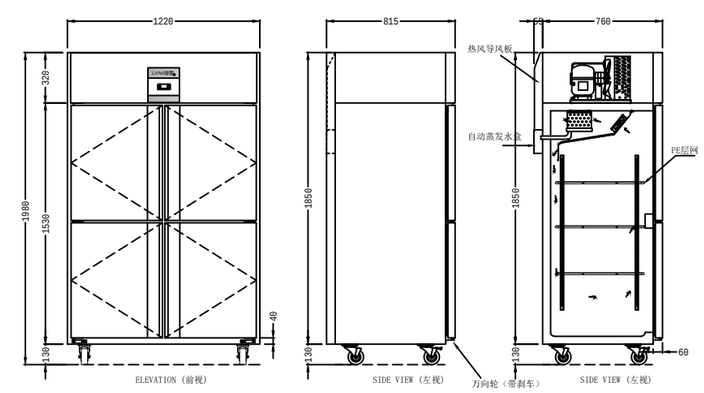

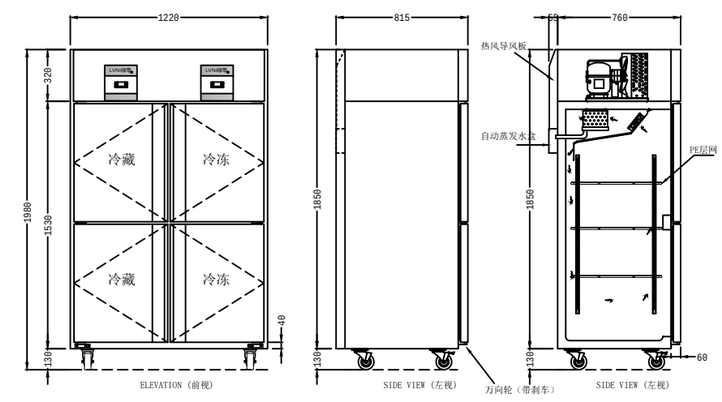

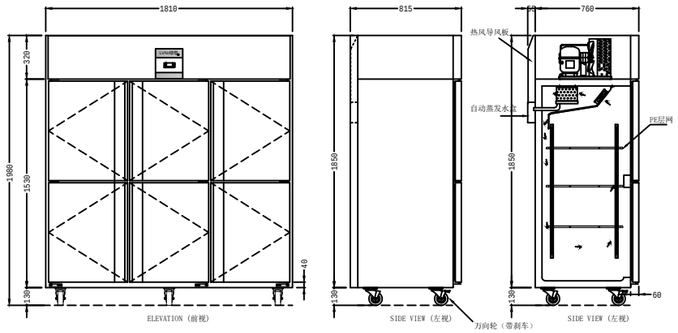

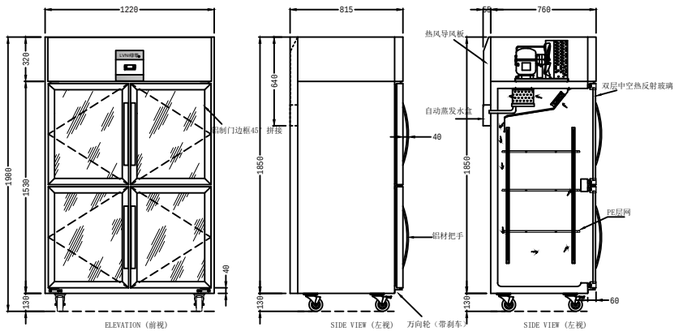

- 材质Material：201#（304#可选/optional）
- 制冷剂Refrigerant：R290/R134a/R404
- 冷冻款门框带发热丝
  Freezer door frame is with heating wire
- 自动蒸发冷凝水
  Condensate evaporates automatically
- 可适应环境温度：+38°C
  Ambient temperature

760深度为冷凝水直排，815深度为冷凝水自动蒸发
- The depth of 760 is for direct drainage of condensate, and the depth of 815 is for automatic evaporation of condensate

■ 型号解释

SB	C	★★L	2	F	D	B	S
S系列B款	立式	容积	门数	风冷	冷冻	玻璃门	双温

型号 Model	尺寸(mm) Dimension	名称 Title	制冷 System	温度 Temp℃	电压 Voltage	功率 power	容积 volume
SBC-0.5L2F	630*760/815*1980	2 doors upright chiller	Air-cooled	Chiller (2~8°C)	220v/50HZ	385W	500L
SBC-0.5L2FD	630*760/815*1980	2 doors upright freezer	Air-cooled	Freezer (-12~-18°C)	220v/50HZ	800W	500L
SBC-1.0L4F	1220*760/815*1980	4 doors upright chiller	Air-cooled	Chiller (2~8°C)	220v/50HZ	550W	1000L
SBC-1.0L4FD	1220*760/815*1980	4 doors upright freezer	Air-cooled	Freezer (-12~-18°C)	220v/50HZ	1420W	1000L
SBC-1.0L4FS	1220*760/815*1980	4 doors dual temp.fridge	Air-cooled	Chiller (2~8°C) Freezer (-12~-18°C)	220v/50HZ	1150W	900L (450L+450L)
SBC-1.6L6F	1810*760/815*1980	6 doors upright chiller	Air-cooled	Chiller (2~8°C)	220v/50HZ	770W	1580L
SBC-1.6L6FD	1810*760/815*1980	6 doors upright freezer	Air-cooled	Freeze (-12~-18°C)	220v/50HZ	1150W	1580L
SBC-1.6L6FS	1810*760/815*1980	6 doors dual temp.fridge	Air-cooled	Chiller (2~8°C) Freezer (-12~-18°C)	220v/50HZ	1850W	1580L (500L+1080L)
SBC-0.5L2FB	630*760/815*1980	2 glass doors upright chiller	Air-cooled	Chiller (2~8°C)	220v/50HZ	385W	500L
SBC-1.0L4FB	1220*760/815*1980	4 glass doors upright chiller	Air-cooled	Chiller (2~8°C)	220v/50HZ	550W	1000L
SBC-1.6L6FB	1810*760/815*1980	6 glass doors upright chiller	Air-cooled	Chiller (2~8°C)	220v/50HZ	770W	1580L

S系列B款平台雪柜
S SERIES B AIR-COOLED COUNTER CHILLER & FREEZER

可拆卸过滤网设计
Detachable dust filter

①冷凝器过滤网可拆卸设计
②方便日常清洁或维护

自动蒸发水冷凝器
Auto water evaporation system, no need drainage

①自动蒸发
②无需排水口

可替换轮脚
Wheels optional

①可调节子弹脚 ②地面不平也放得稳

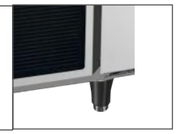

90°自动回归门
90 ° automatic return door

①90°自动回归门 ②避免能源损耗

圆角内胆
Fillet liner

①圆角内胆 ②方便储存 ③易清洁

智能温控器
Smart thermostat

①数字温控 ②精准控温 ③精确到0.1°C

加厚可调层架
Thickened adjustable shelf

①可调节层架 ②灵活掌控空间

可拆卸密封条
Removable sealing strip

①可拆卸密封条 ②方便清洗

S系列B款平台雪柜
S SERIES B AIR-COOLED COUNTER CHILLER & FREEZER

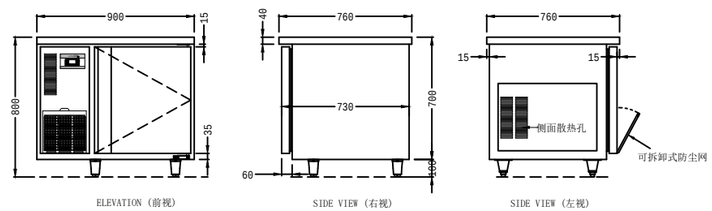

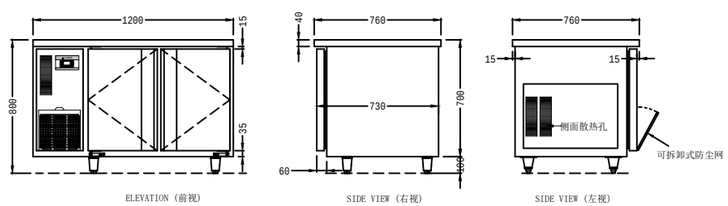

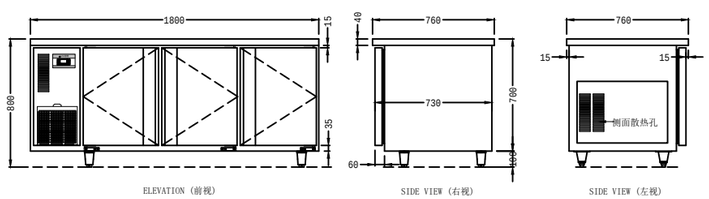

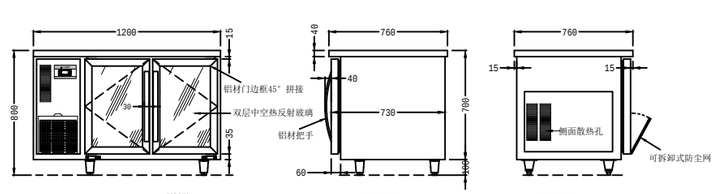

- 材质Materia：201#（304可选optional）
- 冷冻门框带发热丝
  Freezer door frame is with heating wire
- 可适用环境温度：+38°C
  Ambient temperature :+38°C
- 制冷剂Refrigerant：R290/R134a/R404
- 冷凝水自动蒸发
  Condensate evaporates automatically

型号解释

SB	G	★★L	1	F	D	X	B
S系列B款	平台	容积	门数	风冷	冷冻	600mm 深度	玻璃门

型号 Model	尺寸(mm) Dimension	名称 Title	制冷 System	温度 Temp℃	电压 Voltage	功率 power	容积 volume
SBG-0.1L1FX	900*600*800	1 door counter chiller	Air-cooled	Chiller (2~8°C)	220v/50HZ	285W	140L
SBG-0.1L1F	900*760*800	1 door counter chiller	Air-cooled	Chiller (2~8°C)	220v/50HZ	285W	180L
SBG-0.1L1FDX	900*600*800	1 door counter freezer	Air-cooled	Freezer (-12~-18°C)	220v/50HZ	650W	140L
SBG-0.1L1FD	900*760*800	1 door counter freezer	Air-cooled	Freezer (-12~-18°C)	220v/50HZ	650W	180L
SBG-0.2L2FX	1200*600*800	2 doors counter chiller	Air-cooled	Chiller (2~8°C)	220v/50HZ	285W	220L
SBG-0.2L2F	1200*760*800	2 doors counter chiller	Air-cooled	Chiller (2~8°C)	220v/50HZ	285W	300L
SBG-0.2L2FDX	1200*600*800	2 doors counter freezer	Air-cooled	Freezer (-12~-18°C)	220v/50HZ	650W	220L
SBG-0.2L2FD	1200*760*800	2 doors counter freezer	Air-cooled	Freezer (-12~-18°C)	220v/50HZ	650W	300L
SBG-0.3L2FX	1500*600*800	2 doors counter chiller	Air-cooled	Chiller (2~8°C)	220v/50HZ	285W	280L
SBG-0.3L2F	1500*760*800	2 doors counter chiller	Air-cooled	Chiller (2~8°C)	220v/50HZ	285W	390L
SBG-0.3L2FDX	1500*600*800	2 doors counter freezer	Air-cooled	Freezer (-12~-18°C)	220v/50HZ	770W	280L
SBG-0.3L2FD	1500*760*800	2 doors counter freezer	Air-cooled	Freezer (-12~-18°C)	220v/50HZ	770W	390L
SBG-0.4L3FX	1800*600*800	3 doors counter chiller	Air-cooled	Chiller (2~8°C)	220v/50HZ	385W	380L
SBG-0.4L3F	1800*760*800	3 doors counter chiller	Air-cooled	Chiller (2~8°C)	220v/50HZ	385W	500L
SBG-0.4L3FDX	1800*600*800	3 doors counter freezer	Air-cooled	Freezer (-12~-18°C)	220v/50HZ	770W	380L
SBG-0.4L3FD	1800*760*800	3 doors counter freezer	Air-cooled	Freezer (-12~-18°C)	220v/50HZ	770W	500L
SBG-0.2L2FBX	1200*600*800	2 glass doors counter chiller	Air-cooled	Chiller (2~8°C)	220v/50HZ	285W	220L
SBG-0.2L2FB	1200*760*800	2 glass doors counter chiller	Air-cooled	Chiller (2~8°C)	220v/50HZ	285W	300L
SBG-0.3L2FBX	1500*600*800	2 glass doors counter chiller	Air-cooled	Chiller (2~8°C)	220v/50HZ	285W	280L
SBG-0.3L2FB	1500*760*800	2 glass doors counter chiller	Air-cooled	Chiller (2~8°C)	220v/50HZ	285W	390L
SBG-0.4L3FBX	1800*600*800	3 glass doors counter chiller	Air-cooled	Chiller (2~8°C)	220v/50HZ	385W	380L
SBG-0.4L3FB	1800*760*800	3 glass doors counter chiller	Air-cooled	Chiller (2~8°C)	220v/50HZ	385W	500L

B | S系列B款吧台风冷冷柜
S SERIES B AIR-COOLED BAR FRIDGE

简约暗把手
Concise handle

①隐形门把手设计
②不妨碍行动

风冷无霜系统
Air cooled frost free system

①风冷无霜②制冷快速③冷气均匀

智能数字温控
Intelligent temperature control

①数字温控 ②精准控温③精确到0.1°C

安全童锁配置
Safety child lock configuration

①防止随意打开 ②方便管理

B | S系列B款吧台风冷冷柜
S SERIES B AIR-COOLED BAR FRIDGE

- 可适应环境温度：+28°C
  Ambient temperature :+28°C
- 制冷剂Refrigerant：R290/R134a/R404
- 冷凝水自动蒸发
  Condensate evaporates automatically

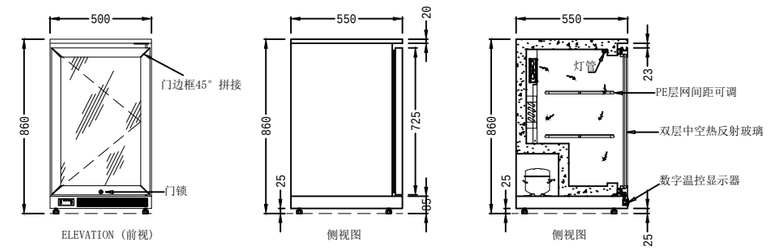

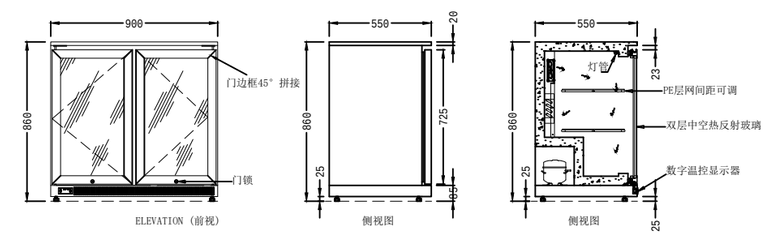

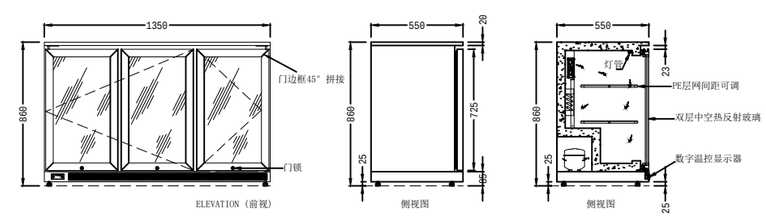

B | S系列B款不锈钢吧台风冷冷柜

S SERIES B STAINLESS STEEL BAR TYPHOON REFRIGERATOR

- 可适应环境温度：+28°C
  Ambient temperature :+28°C
- 制冷剂Refrigerant：R290/R134a/R404
- 冷凝水自动蒸发
  Condensate evaporates automatically

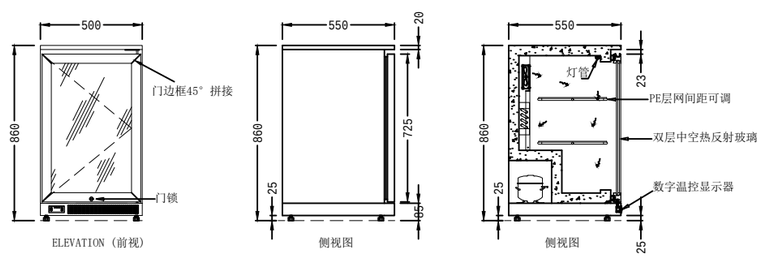

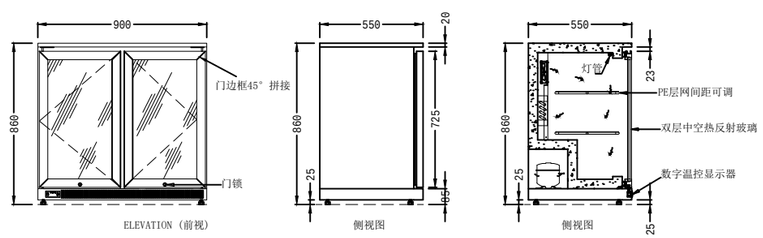

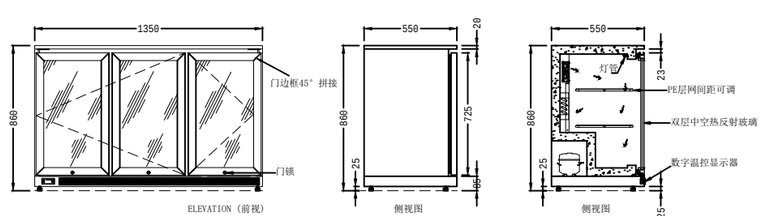

型号 Model	尺寸(mm) Dimension	名称 Title	制冷 System	温度 Temp℃	电压 Voltage	功率 power	容积 volume
SHB-108LF	500*500*860	1 door bar fridge	Air-cooled	Fridge (2~8°C)	220v/50HZ	220W	108L
SHB-230L2F	900*550*860	2 doors bar fridge	Air-cooled	Fridge (2~8°C)	220v/50HZ	285W	230L
SHB-350L3F	1350*550*860	3 doors bar fridge	Air-cooled	Fridge (2~8°C)	220v/50HZ	385W	350L
SGB-108LF	500*550*860	1 door stainless steel bar fridge	Air-cooled	Fridge (2~8°C)	220v/50HZ	220W	108L
SGB-230L2F	900*550*860	2 doors stainless steel bar fridge	Air-cooled	Fridge (2~8°C)	220v/50HZ	285W	230L
SGB-350L3F	1350*550*860	3 doors stainless steel bar fridge	Air-cooled	Fridge (2~8°C)	220v/50HZ	385W	350L

G | S系列G款高身雪柜
S SERIES G AIR-COOLED UPRIGHT CHILLER & FREEZER

模块化机组
Modular compressor unit

①制冷机组可拆卸式设计
②方便维修或更换机组

可拆卸过滤网设计
Detachable dust filter

①冷凝器过滤网可拆卸设计
②方便日常清洁或维护

进口压缩机
Secop compressor from Germany

①高效率 ②低能耗 ③低维修率

智能温控器
Smart thermostat

①数字温控 ②精准控温 ③精确到0.1°C

风循环制冷
Fierce fan cooling circulation

①风冷无霜 ②制冷快速 ③冷气均匀

加厚可调层架
Thickened adjustable shelf

①可调节层架 ②灵活掌控空间

圆角内胆
Fillet liner

①圆角内胆 ②方便储存 ③易清洁

360°万向轮脚
360 ° universal wheel foot

①带刹车万向轮脚 ②方便移动又稳固

自动蒸发水冷凝器
Auto water evaporation system, no need drainage

①自动蒸发 ②无需排水口

G | S系列G款高身雪柜
S SERIES G AIR-COOLED UPRIGHT CHILLER & FREEZER

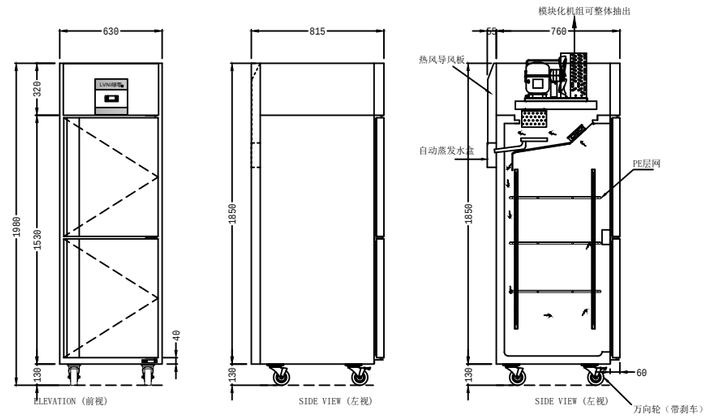

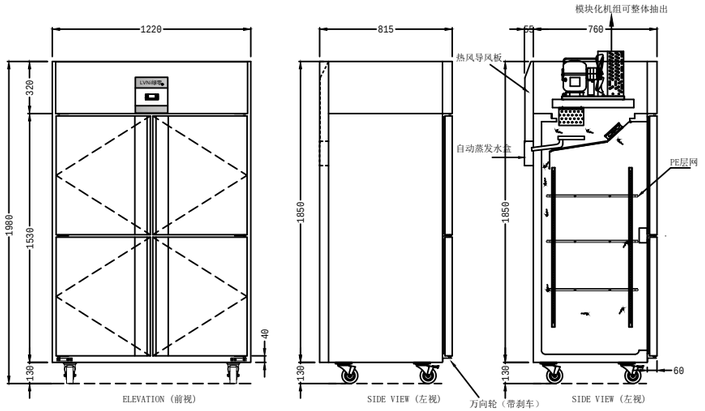

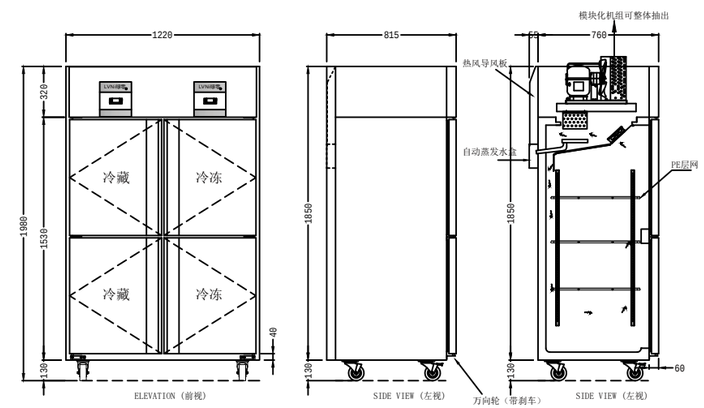

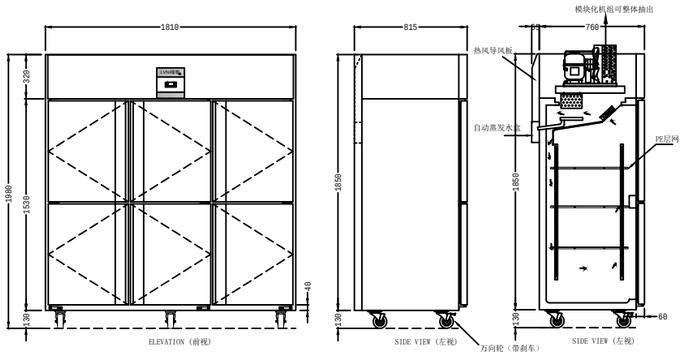

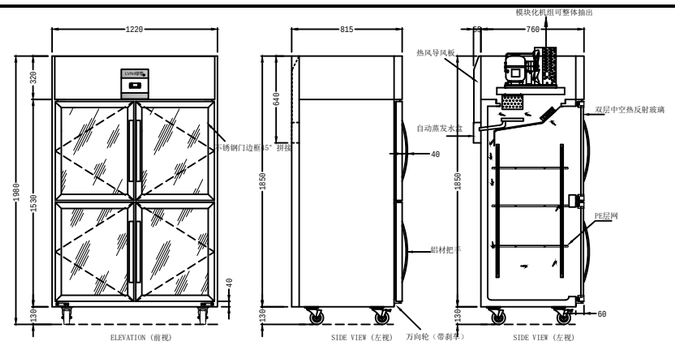

- 材质Material：201#（304#可选optional）
- 冷冻款门框带发热丝
  Freezer door frame is with heating wire
- 可适应环境温度：+38°C
  Ambient temperature
- 760深度为冷凝水直排，815深度为冷凝水自动蒸发
  The depth of 760 is for direct drainage of condensate,
  and the depth of 815 is for automatic evaporation of condensate
- 制冷剂Refrigerant：R290/R134a/R404
- 冷凝水自动蒸发
  Condensate evaporates automatically
- 进口压缩机
  Secop compressor from Germany

■ 型号解释

SG	C	★★L	2	F	D	B	S
S系列G款	立式	容积	门数	风冷	冷冻	玻璃门	双温

型号 Model	尺寸(mm) Dimension	名称 Title	制冷 System	温度 Temp C	电压 Voltage	功率 power	容积 volume
SGC-0.5L2F	630*760/815*1980	2 doors upright chiller	Air-cooled	Chiller (2~8°C)	220v/50HZ	660W	500L
SGC-0.5L2FD	630*760/815*1980	2 doors upright freezer	Air-cooled	Freezer (-18~-23°C)	220v/50HZ	990W	500L
SGC-1.0L4F	1220*760/815*1980	4 doors upright chiller	Air-cooled	Chiller (2~8°C)	220v/50HZ	770W	1000L
SGC-1.0L4FD	1220*760/815*1980	4 doors upright freezer	Air-cooled	Freezer (-18~-23°C)	220v/50HZ	1420W	1000L
SGC-1.0L4FS	1220*760/815*1980	4 doors dual temp.fridge	Air-cooled	Chiller (2~8°C) Freezer (-18~-23°C)	220v/50HZ	1150W	900L (450L+450L)
SGC-1.6L6F	1810*760/815*1980	6 doors upright chiller	Air-cooled	Chiller (2~8°C)	220v/50HZ	1300W	1580L
SGC-1.6L6FD	1810*760/815*1980	6 doors upright freezer	Air-cooled	Freezer (-18~-23°C)	220v/50HZ	2200W	1580L
SGC-1.6L6FS	1810*760/815*1980	6 doors dual temp.fridge	Air-cooled	Chiller (2~8°C) Freezer (-18~-23°C)	220v/50HZ	1120W	1580L (500L+1080L)
SGC-0.5L2FB	630*760/815*1980	2 glass doors upright chiller	Air-cooled	Chiller (2~8°C)	220v/50HZ	385W	500L
SGC-1.0L4FB	1220*760/815*1980	4 glass doors upright chiller	Air-cooled	Chiller (2~8°C)	220v/50HZ	550W	1000L
SGC-1.6L6FB	1810*760/815*1980	6 glass doors upright chiller	Air-cooled	Chiller (2~8°C)	220v/50HZ	770W	1580L

G | S系列G款平台雪柜
S SERIES G AIR-COOLED COUNTER CHILLER & FREEZER

可拆卸过滤网设计
Detachable dust filter
①冷凝器过滤网可拆卸设计
②方便日常清洁或维护

自动蒸发水冷凝器
Auto water evaporation system, no need drainage
①自动蒸发
②无需排水口

可替换轮脚
Wheels optional
①可调节子弹脚 ②地面不平也放得稳

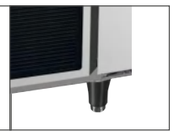

90°自动回归门
90 ° automatic return door
①90°自动回归门 ②避免能源损耗

圆角内胆
Fillet liner
①圆角内胆 ②方便储存 ③易清洁

智能温控器
Smart thermostat
①数字温控 ②精准控温 ③精确到0.1°C

加厚可调层架
Thickened adjustable shelf
①可调节层架 ②灵活掌控空间

可拆卸密封条
Removable sealing strip
①可拆卸密封条 ②方便清洗

G | S系列G款平台雪柜
S SERIES G AIR-COOLED COUNTER CHILLER & FREEZER

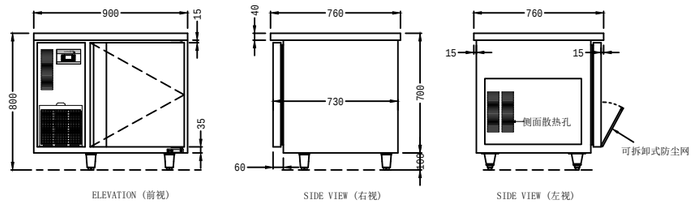

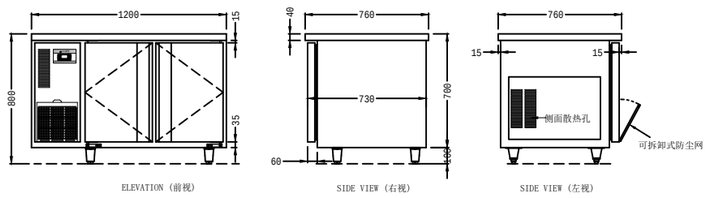

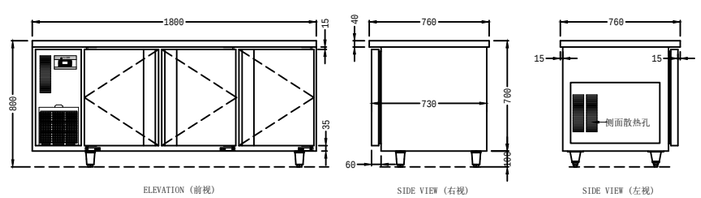

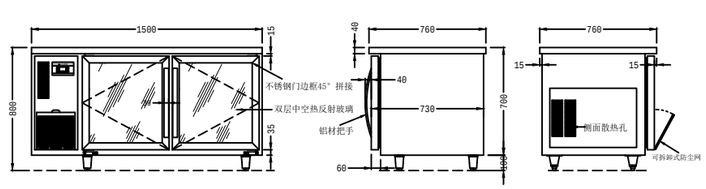

- 材质Material：201#（304#可选optional）
- 冷冻款门框带发热丝
  Freezer door frame is with heating wire
- 可适应环境温度：+38°C
  Ambient temperature：+38°C
- 制冷剂Refrigerant： R290/R134a/R404
- 冷凝水自动蒸发
  Condensate evaporates automatically
- 进口压缩机
  Secop compressor from Germany

■ 型号解释

SG G ★★L 1 F D X B

S系列G款 平台 容积 门数 风冷 冷冻 600mm深度 玻璃门

型号 Model	尺寸(mm) Dimension	名称 Title	制冷 System	温度 Temp C	电压 Voltage	功率 power	容积 volume
SGG-0.1L1FX	900*600*800	1 door counter chiller	Air-cooled	Chiller (2~8°C)	220v/50HZ	285W	140L
SGG-0.1L1F	900*760*800	1 door counter chiller	Air-cooled	Chiller (2~8°C)	220v/50HZ	285W	180L
SGG-0.1L1FDX	900*600*800	1 door counter freezer	Air-cooled	Freezer (-18~-23°C)	220v/50HZ	650W	140L
SGG-0.1L1FD	900*760*800	1 door counter freezer	Air-cooled	Freezer (-18~-23°C)	220v/50HZ	650W	180L
SGG-0.2L2FX	1200*600*800	2 doors counter chiller	Air-cooled	Chiller (2~8°C)	220v/50HZ	550W	220L
SGG-0.2L2F	1200*760*800	2 doors counter chiller	Air-cooled	Chiller (2~8°C)	220v/50HZ	550W	300L
SGG-0.2L2FDX	1200*600*800	2 doors counter freezer	Air-cooled	Freezer (-18~-23°C)	220v/50HZ	800W	200L
SGG-0.2L2FD	1200*760*800	2 doors counter freezer	Air-cooled	Freezer (-18~-23°C)	220v/50HZ	800W	300L
SGG-0.3L2FX	1500*600*800	2 doors counter chiller	Air-cooled	Chiller (2~8°C)	220v/50HZ	550W	280L
SGG-0.3L2F	1500*760*800	2 doors counter chiller	Air-cooled	Chiller (2~8°C)	220v/50HZ	550W	390L
SGG-0.3L2FDX	1500*600*800	2 doors counter freezer	Air-cooled	Freezer (-18~-23°C)	220v/50HZ	900W	280L
SGG-0.3L2FD	1500*760*800	2 doors counter freezer	Air-cooled	Freezer (-18~-23°C)	220v/50HZ	900W	390L
SGG-0.4L3FX	1800*600*800	3 doors counter chiller	Air-cooled	Chiller (2~8°C)	220v/50HZ	660W	380L
SGG-0.4L3F	1800*760*800	3 doors counter chiller	Air-cooled	Chiller (2~8°C)	220v/50HZ	660W	500L
SGG-0.4L3FDX	1800*600*800	3 doors counter freezer	Air-cooled	Freezer (-18~-23°C)	220v/50HZ	900W	380L
SGG-0.4L3FD	1800*760*800	3 doors counter freezer	Air-cooled	Freezer (-18~-23°C)	220v/50HZ	900W	500L
SGG-0.2L2FBX	1200*600*800	2 glass doors counter chiller	Air-cooled	Chiller (2~8°C)	220v/50HZ	285W	200L
SGG-0.2L2FB	1200*760*800	2 glass doors counter chiller	Air-cooled	Chiller (2~8°C)	220v/50HZ	285W	300L
SGG-0.3L2FBX	1500*600*800	2 glass doors counter chiller	Air-cooled	Chiller (2~8°C)	220v/50HZ	285W	280L
SGG-0.3L2FB	1500*760*800	2 glass doors counter chiller	Air-cooled	Chiller (2~8°C)	220v/50HZ	285W	390L
SGG-0.4L3FBX	1800*600*800	3 glass doors counter chiller	Air-cooled	Chiller (2~8°C)	220v/50HZ	385W	380L
SGG-0.4L3FB	1800*760*800	3 glass doors counter chiller	Air-cooled	Chiller (2~8°C)	220v/50HZ	385W	500L

G | S系列G款高身插盘雪柜

S SERIES G AIR-COOLED UPRIGHT PLUG-IN CHILLER & FREEZER

进口压缩机
Secop compressor from Germany

①高效率 ②低能耗 ③低维修率

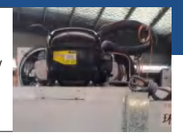

智能温控器
Smart thermostat

①数字温控 ②精准控温 ③精确到0.1°C

风循环制冷
Fierce fan cooling circulation

①风冷无霜 ②制冷快速 ③冷气均匀

插盘间隙可调
Adjustable plug pan gap

①适放置28盘600*400mm插盘
②间距可调

圆角内胆
Fillet liner

①圆角内胆 ②方便储存 ③易清洁

360°万向轮脚
360 ° universal wheel foot

①带刹车万向轮脚 ②方便移动又稳固

G | S系列G款高身插盘雪柜

S SERIES G AIR-COOLED UPRIGHT PLUG-IN CHILLER & FREEZER

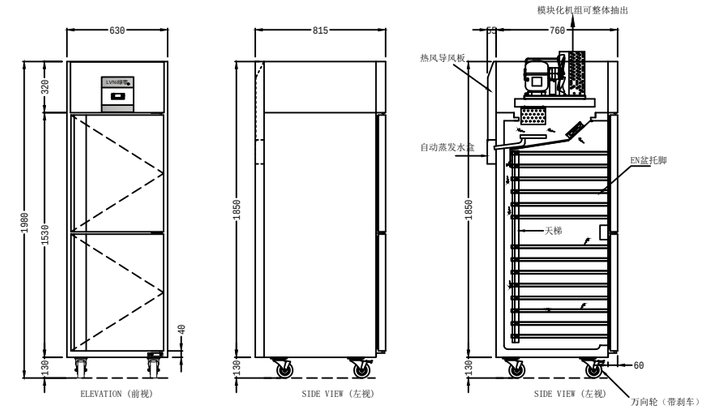

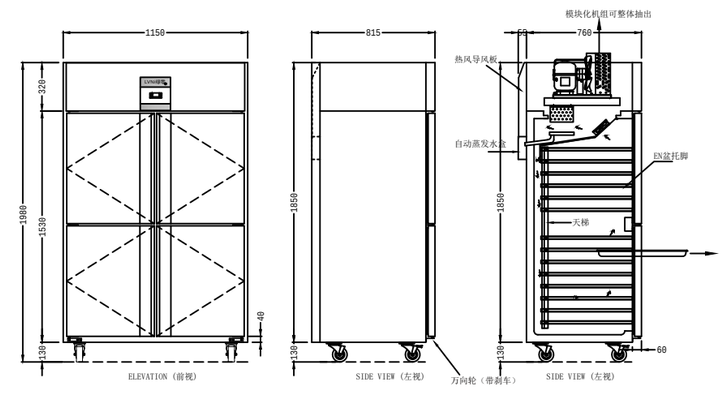

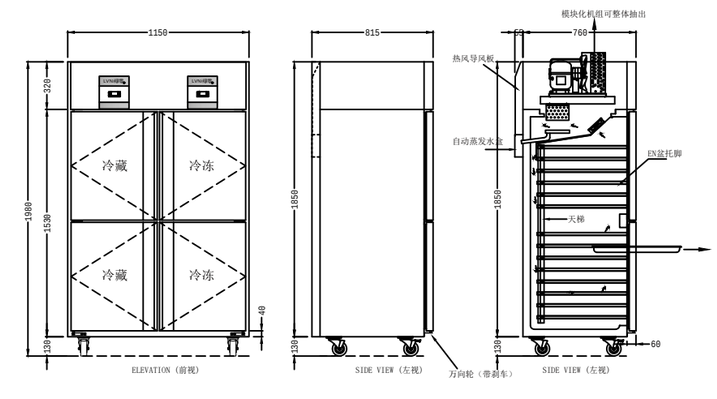

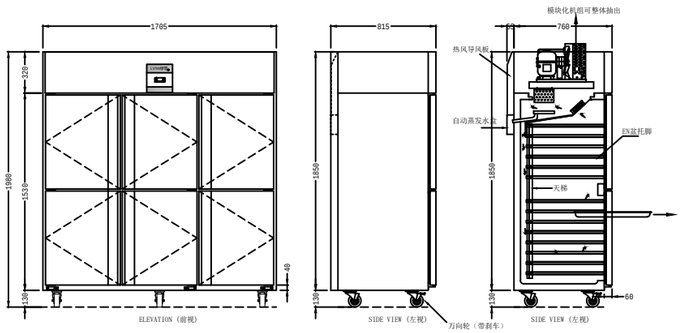

- 材质Material：201#（304#）可选optional
- 可适应环境温度：+38°C
  Ambient temperature：+38°C
- 冷冻款门框带发热丝
  Freezer door frame is with heating wire
- 自动蒸发冷凝水
  Condensate evaporates automatically
- 制冷剂Refrigerant：R290/R134a/R404
- 进口压缩机
  Secop compressor from Germany

型号 Model	尺寸(mm) Dimension	名称 Title	制冷 System	温度 Temp C	电压 Voltage	功率 power	容积 volume
SKC-0.5L2F	630*815*1980	2 doors upright plug-in chiller	Air-cooled	Chiller (2~8°C)	220v/50HZ	660W	500L
SKC-0.5L2FD	630*815*1980	2 doors upright plug-in freezer	Air-cooled	Freezer (-18~-23°C)	220v/50HZ	990W	500L
SKC-1.0L4F	1150*815*1980	4 doors upright plug-in chiller	Air-cooled	Chiller (2~8°C)	220v/50HZ	770W	1000L
SKC-1.0L4FD	1150*815*1980	4 doors upright plug-in freezer	Air-cooled	Freezer (-18~-23°C)	220v/50HZ	1420W	1000L
SKC-1.0L4FS	1150*815*1980	4 doors upright plug-in freezer	Air-cooled	Chiller (2~8°C) Freezer (-18~-23°C)	220v/50HZ	1150W	900L (450L+450L)
SKC-1.6L6F	1705*815*1980	6 doors upright plug-in chiller	Air-cooled	Chiller (2~8°C)	220v/50HZ	1300W	1580L
SKC-1.6L6FD	1705*815*1980	6 doors upright plug-in freezer	Air-cooled	Freezer (-18~-23°C)	220v/50HZ	2200W	1580L
SKC-1.6L6FS	1705*815*1980	6 doors upright plug-in freezer	Air-cooled	Chiller (2~8°C) Freezer (-18~-23°C)	220v/50HZ	1120W	1580L (500+1080L)

G | S系列G款卧式披萨风冷冷柜
S SERIES G AIR-COOLED PIZZA REFRIGERATOR

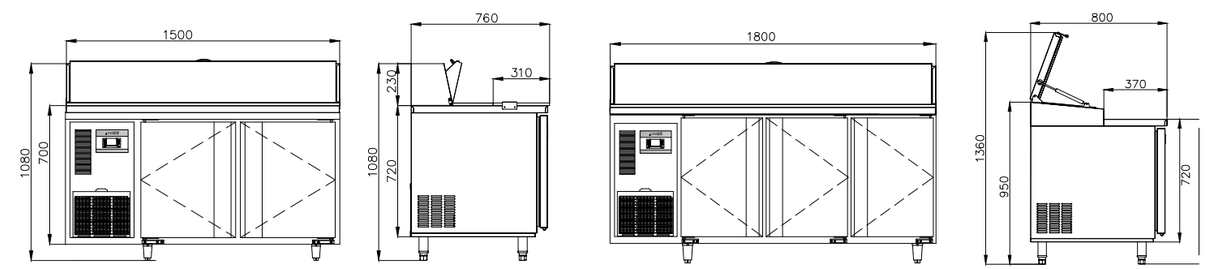

- 可适应环境温度：+38°C
  Ambient temperature：+38°C
- 进口压缩机
  Secop compressor from Germany
- 自动蒸发冷凝水
  Condensate evaporates automatically
- 材质Material：201#（304#）可选optional
- 制冷剂Refrigerant：R290/R134a/R404

型号 Model	尺寸(mm) Dimension	名称 Title	制冷 System	温度 Temp C	电压 Voltage	功率 power	份数盆 Portion basin
SPS-900	900*760*1050	1 door salad/pizza chiller	Air-cooled	Chiller (2~8°C)	220v/50HZ	285W	6个
SPS-1200	1200*760*1050	2 doors salad/pizza chiller	Air-cooled	Chiller (2~8°C)	220v/50HZ	550W	6个
SPS-1500	1500*760*1050	2 doors salad/pizza chiller	Air-cooled	Chiller (2~8°C)	220v/50HZ	550W	6个
SPS-1800	1800*760*1050	3 doors salad/pizza chiller	Air-cooled	Chiller (2~8°C)	220v/50HZ	660W	10个

G | S系列G款卧式沙拉风冷冷柜
S SERIES G AIR-COOLED SALAD REFRIGERATOR

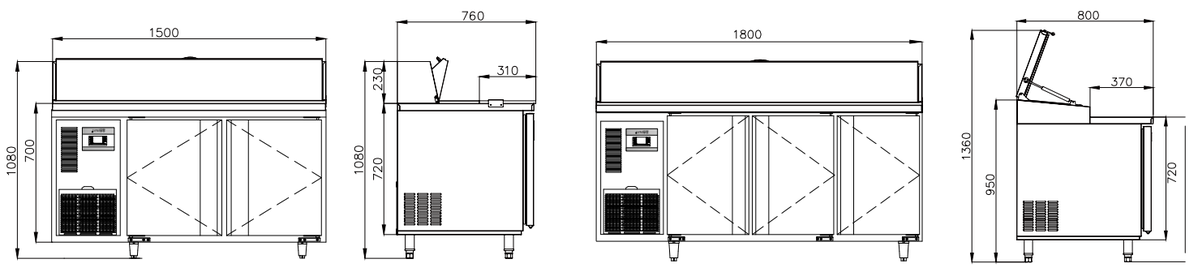

- 可适应环境温度：+38°C
  Ambient temperature ：+38°C
- 自动蒸发冷凝水
  Condensate evaporates automatically
- 进口压缩机
  Secop compressor from Germany
- 材质Material：201#（304#）可选optional
- 制冷剂Refrigerant：R290/R134a/R404

型号 Model	尺寸 (mm) Dimension	名称 Title	制冷 System	温度 Temp ℃	电压 Voltage	功率 power	容积 volume
SSL-900	900*760*1050	1 door salad/pizza chiller	Air-cooled	Chiller (2~8°C)	220v/50HZ	285W	160L
SSL-1200	1200*760*1050	2 doors salad/pizza chiller	Air-cooled	Chiller (2~8°C)	220v/50HZ	550W	220L
SSL-1500	1500*760*1050	2 doors salad/pizza chiller	Air-cooled	Chiller (2~8°C)	220v/50HZ	550W	320L
SSL-1800	1800*760*1050	3 doors salad/pizza chiller	Air-cooled	Chiller (2~8°C)	220v/50HZ	660W	420L

台上式沙拉台
COUNTERTOP SALAD TABLE

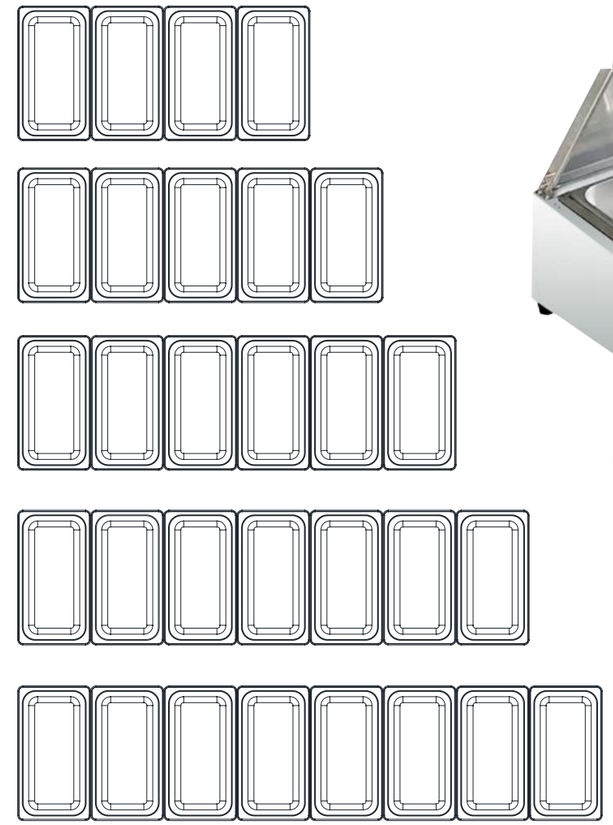

型号 Model	分类 Classification	规格（mm) Dimensions	功率 (W) Power	重量 (KG) Weight	制冷剂 Ref.	温度范围 (°C) Temperature	制冷方式 Refrigeraton
TZ1115C-SL	Countertop Salad Table	1115*395*425	280	25	R134a	2°C~8°C	Static cooling
TZ1295C-SL	Countertop Salad Table	1295*395*425	280	30	R134a	2°C~8°C	Static cooling
TZ1475C-SL	Countertop Salad Table	1475*395*425	280	35	R134a	2°C~8°C	Static cooling
TZ1655C-SL	Countertop Salad Table	1655*395*425	280	40	R134a	2°C~8°C	Static cooling
TZ1835C-SL	Countertop Salad Table	1835*395*425	280	45	R134a	2°C~8°C	Static cooling

G | S系列G款卧式抽屉风冷冷柜

S SERIES G AIR-COOLED COUNTER CHILLER & FREEZER WITH DRAWERS

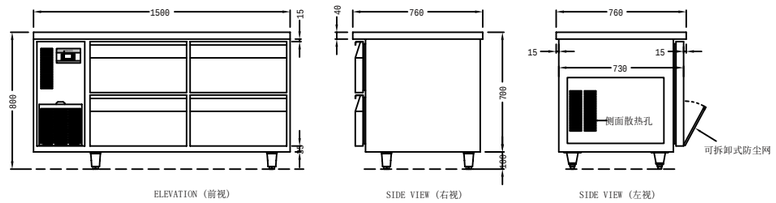

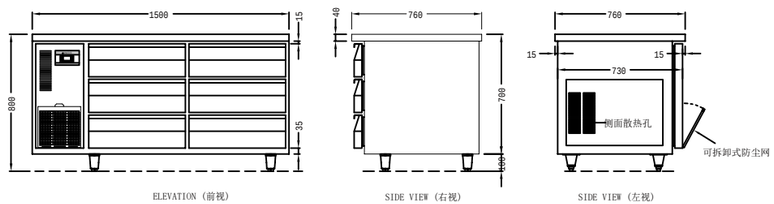

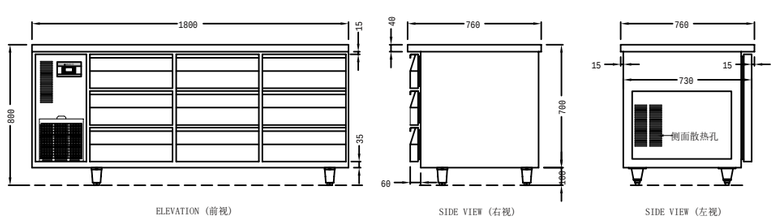

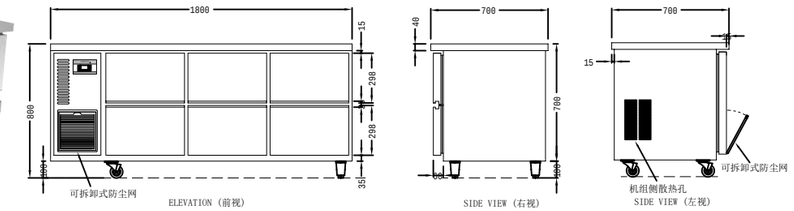

- 可适应环境温度：+38°C
  Ambient temperature：+38°C
- 自动蒸发冷凝水
  Condensate evaporates automatically
- 进口压缩机
  Secop compressor from Germany
- 材质Material：201#（304#）可选optional
- 制冷剂Refrigerant：R290/R134a/R404

型号解释

SG	G	★★L	1	F	D	N	(W)
S系列	G款平台	容积	门数	风冷	冷冻	一组两抽	一组三抽

型号 Model	尺寸(mm) Dimension	名称 Title	制冷 System	温度 Temp℃	电压 Voltage	功率 Power	抽屉数 Drawer
SGG-0.1L1FN	900*760/600*800	2 drawers counter chiller	Air-cooled	Chiller (2~8°C)	220v/50HZ	550W	2个
SGG-0.2L2FNN	1200*760/600*800	4 drawers counter chiller	Air-cooled	Chiller (2~8°C)	220v/50HZ	550W	4个
SGG-0.3L2FNN	1500*760/600*800	4 drawers counter chiller	Air-cooled	Chiller (2~8°C)	220v/50HZ	550W	4个
SGG-0.4L3FNNN	1800*760/600*800	6 drawers counter chiller	Air-cooled	Chiller (2~8°C)	220v/50HZ	660W	6个
SGG-0.1L1FW	900*760/600*800	3 drawers counter chiller	Air-cooled	Chiller (2~8°C)	220v/50HZ	550W	3个
SGG-0.2L2FWW	1200*760/600*800	6 drawers counter chiller	Air-cooled	Chiller (2~8°C)	220v/50HZ	550W	6个
SGG-0.3L2FWW	1500*760/600*800	6 drawers counter chiller	Air-cooled	Chiller (2~8°C)	220v/50HZ	550W	6个
SGG-0.4L3FWWW	1800*760/600*800	9 drawers counter chiller	Air-cooled	Chiller (2~8°C)	220v/50HZ	660W	9个

TG | TG款高身雪柜系列
TG SERIES AIR-COOLED UPRIGHT CHILLER & FREEZER

模块化机组
Modular compressor unit

①制冷机组可拆卸式设计
②方便维修或更换机组

可拆卸过滤网设计
Detachable dust filter

①冷凝器过滤网可拆卸设计
②方便日常清洁或维护

进口压缩机
Secop compressor from Germany

①高效率 ②低能耗 ③低维修率

智能温控器
Smart thermostat

①数字温控 ②精准控温 ③精确到0.1℃

风循环制冷
Fierce fan cooling circulation

①风冷无霜 ②制冷快速 ③冷气均匀

加厚可调层架
Thickened adjustable shelf

①可调节层架 ②灵活掌控空间

圆角内胆
Fillet liner

①圆角内胆 ②方便储存 ③易清洁

360°万向轮脚
360 ° universal wheel foot

①带刹车万向轮脚 ②方便移动又稳固

自动蒸发水冷凝器
Auto water evaporation system, no need drainage

①自动蒸发 ②无需排水口

TG | TG款高身雪柜系列
TG SERIES AIR-COOLED UPRIGHT CHILLER & FREEZER

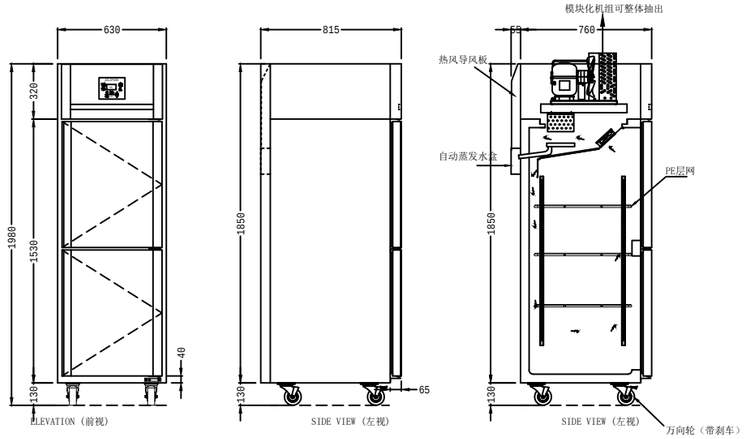

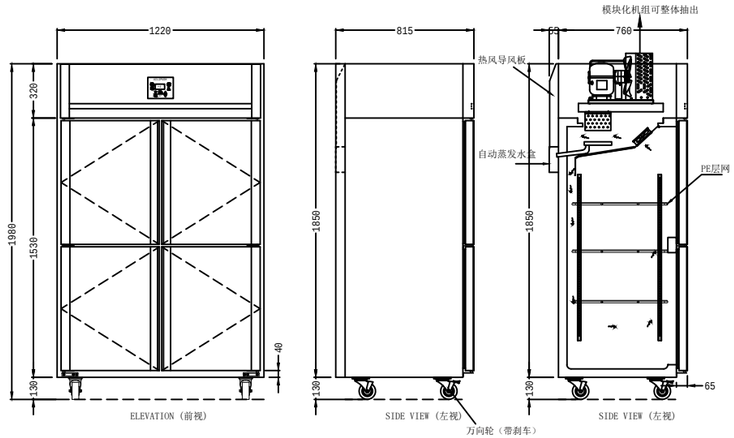

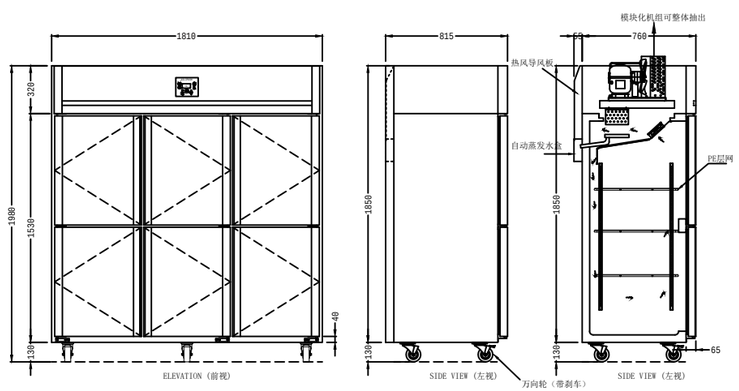

Product advantages
产品优点

镀锌底及背
Galvanized bottom and back

304不锈钢外壳及内胆
304 stainless steel shell and liner

采用150mm高的可调子弹脚
150mm high adjustable bullet foot

自动化水设计
Condensate evaporates automatically

共配5个PE层网
5 PE layer network

数字温控
digital temperature control

220V/50Hz

内胆圆弧设计方便清洁
Arc design of the inner tank

Alternative configuration
备选配置

304不锈钢背
304 stainless steel back

304不锈钢底
304 stainless steel bottom

配灯
Lighting

发热玻璃门
heating glass door

双通门
Double-pass door

双通发热膜玻璃门(不适用于低温柜)
Double-pass heating film glass door
(not suitable for low-temperature cabinets)

下门改2抽屉(不适用于低温柜)
Change the door to 2 drawers
(not suitable for low-temperature cabinets)

下门改3抽屉(不适用于低温柜)
Change the door to 3 drawers
(not suitable for low temperature cabinets)

轮子wheel

型号 Model	尺寸 Dimension	名称 Titel	制冷 System	温度 Temp℃	电压 Voltage	雪种 Ref.	容积 Volume
TG-0.5L1F	630*760/815*1980	1 door upright chiller	Air-cooled	+2~+8℃	220V/50Hz	R134a	412L
TG-0.5L1FM	630*760/815*1980	1 door upright chiller	Air-cooled	-2~+2℃	220V/50Hz	R134a	412L
TG-0.5L1FD	630*760/815*1980	1 door upright freezer	Air-cooled	-23~-18℃	220V/50Hz	R404a	412L
TG-0.5L2F	630*760/815*1980	2 doors upright chiller	Air-cooled	+2~+8℃	220V/50Hz	R134a	412L
TG-0.5L2FM	630*760/815*1980	2 doors upright chiller	Air-cooled	-2~+2℃	220V/50Hz	R134a	412L
TG-0.5L2FD	630*760/815*1980	2 doors upright freezer	Air-cooled	-23~-18℃	220V/50Hz	R404a	412L
TG-1.0L2F	1220*760/815*1980	2 doors upright chiller	Air-cooled	+2~+8℃	220V/50Hz	R134a	880L
TG-1.0L2FM	1220*760/815*1980	2 doors upright chiller	Air-cooled	-2~+2℃	220V/50Hz	R134a	880L
TG-1.0L2FD	1220*760/815*1980	2 doors upright freezer	Air-cooled	-23~-18℃	220V/50Hz	R404a	880L
TG-1.0L2FS	1220*760/815*1980	2 doors dual temp.fridge	Air-cooled	+2~+8℃ /-23~-18℃	220V/50Hz	R404a	880L
TG-1.0L4F	1220*760/815*1980	4 doors upright chiller	Air-cooled	+2~+8℃	220V/50Hz	R134a	880L
TG-1.0L4FM	1220*760/815*1980	4 doors upright chiller	Air-cooled	-2~+2℃	220V/50Hz	R134a	880L
TG-1.0L4FD	1220*760/815*1980	4 doors upright freezer	Air-cooled	-23~-18℃	220V/50Hz	R404a	880L
TG-1.0L4FS	1220*760/815*1980	4 doors dual temp.fridge	Air-cooled	+2~+8℃ /-23~-18℃	220V/50Hz	R404a	880L
TG-1.6L3F	1830*760/815*1980	3 doors upright chiller	Air-cooled	+2~+8℃	220V/50Hz	R134a	1300L
TG-1.6L3FM	1830*760/815*1980	3 doors upright chiller	Air-cooled	-2~+2℃	220V/50Hz	R134a	1300L
TG-1.6L3FD	1830*760/815*1980	3 doors upright freezer	Air-cooled	-23~-18℃	220V/50Hz	R404a	1300L
TG-1.6L3FS	1830*760/815*1980	3 doors dual temp.fridge	Air-cooled	+2~+8℃ /-23~-18℃	220V/50Hz	R404a	1300L
TG-1.6L6F	1830*760/815*1980	6 doors upright chiller	Air-cooled	+2~+8℃	220V/50Hz	R134a	1300L
TG-1.6L6FM	1830*760/815*1980	6 doors upright chiller	Air-cooled	-2~+2℃	220V/50Hz	R134a	1300L
TG-1.6L6FD	1830*760/815*1980	6 doors upright freezer	Air-cooled	-23~-18℃	220V/50Hz	R404a	1300L
TG-1.6L4FS	1830*760/815*1980	6 doors dual temp.fridge	Air-cooled	+2~+8℃ /-23~-18℃	220V/50Hz	R404a	1300L

TG | TG款平台雪柜系列
TG SERIES AIR-COOLED COUNTER CHILLER & FREEZER

可拆卸过滤网设计
Detachable dust filter

①冷凝器过滤网可拆卸设计
②方便日常清洁或维护

外衔式紧凑化机组设计
Modular compressor unit

①外衔式紧凑化机组设计
②内部使用空间更大

自动蒸发水冷凝器
Auto water evaporation system, no need drainage

①自动蒸发
②无需排水口

智能温控器
Smart thermostat

①数字温控 ②精准控温 ③精确到0.1℃

150mm高的可调子弹脚
150mm high adjustable bullet foot

①可调节子弹脚 ②地面不平也放得稳

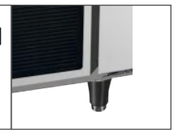

加厚可调层架
Thickened adjustable shelf

①可调节层架 ②灵活掌控空间

圆角内胆
Fillet liner

①圆角内胆 ②方便储存 ③易清洁

可拆卸密封条
Removable sealing strip

①可拆卸密封条 ②方便清洗

TG | TG款平台雪柜系列
TG SERIES AIR-COOLED COUNTER CHILLER & FREEZER

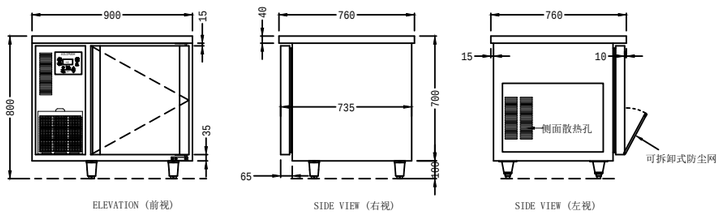

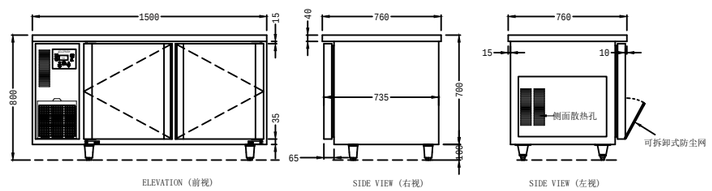

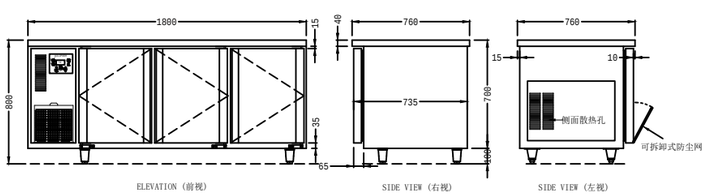

Product advantages
产品优点

304不锈钢外壳及内胆
304 stainless steel shell and liner

镀锌底及背
Galvanized bottom and back

采用150mm高的可调子弹脚
150mm high adjustable bullet foot

每个柜室配1个PE层网(仅限柜门式)
Each cabinet room is equipped with
1 PE layer net (only for cabinet door type)

自动化水设计
Auto water evaporation system, no need drainage

数字温控
digital temperature control

220V/50Hz

模块化机组设计，便于清洁及维修
modular unit design, easy to clean and maintain

内胆圆弧设计方便清洁
The arc design of the inner
tank is convenient for cleaning

Alternative configuration
备选配置

304不锈钢底
304 stainless steel bottom

304不锈钢背
304 stainless steel back

高温雪柜配日光灯
chiller with fluorescent lamp

低温雪柜配LED灯
freezer with LED light

发热玻璃门
heating glass door

双通门
Double-pass door

单门改2抽屉
Single door changed to 2 drawers

单门改3抽屉
Single door changed to 3 drawers

单门改2/3+1/3抽屉
Single door changed to 2/3+1/3 drawer

背挡板
Splash back

50mm高踢脚板
50mm high skirting board

不锈钢裙脚
right unit

台面开口沙拉槽
Split unit optional

右边机组
right unit

分体机组可选
Split unit optional

轮子wheel

220V160Hz

型号 Model	尺寸 Dimension	名称 Titel	制冷 System	温度 Temp ℃	电压 Voltage	雪种 Ref.	容积 Volume
TG-0.1L1F	900*760*850	1 door counter chiller	Air-cooled	+1~+4℃	220V/50Hz	R134a	145L
TG-0.1L1FM	900*760*850	1 door counter chiller	Air-cooled	-2~+2℃	220V/50Hz	R134a	145L
TG-0.1L1FD	900*760*850	1 door counter freezer	Air-cooled	-22~-18℃	220V/50Hz	R404a	145L
TG-0.2L2F	1200*760*850	2 doors counter chiller	Air-cooled	+1~+4℃	220V/50Hz	R134a	263L
TG-0.2L2FM	1200*760*850	2 doors counter chiller	Air-cooled	-2~+2℃	220V/50Hz	R134a	263L
TG-0.2L2FD	1200*760*850	2 doors counter freezer	Air-cooled	-22~-18℃	220V/50Hz	R404a	263L
TG-0.3L2F	1500*760*850	2 doors counter chiller	Air-cooled	+1~+4℃	220V/50Hz	R134a	370L
TG-0.3L2FM	1500*760*850	2 doors counter chiller	Air-cooled	-2~+2℃	220V/50Hz	R134a	370L
TG-0.3L2FD	1500*760*850	2 doors counter freezer	Air-cooled	-22~-18℃	220V/50Hz	R404a	370L
TG-0.4L2F	1800*760*850	2 doors counter chiller	Air-cooled	+1~+4℃	220V/50Hz	R134a	478L
TG-0.4L2FM	1800*760*850	2 doors counter chiller	Air-cooled	-2~+2℃	220V/50Hz	R134a	478L
TG-0.4L2FD	1800*760*850	2 doors counter freezer	Air-cooled	-22~-18℃	220V/50Hz	R404a	478L
TG-0.4L3F	1800*760*850	3 doors counter chiller	Air-cooled	+1~+4℃	220V/50Hz	R134a	478L
TG-0.4L3FM	1800*760*850	3 doors counter chiller	Air-cooled	-2~+2℃	220V/50Hz	R134a	478L
TG-0.4L3FD	1800*760*850	3 doors counter freezer	Air-cooled	-22~-18℃	220V/50Hz	R404a	478L

GN | GN款高身雪柜
GN SERIES AIR-COOLED UPRIGHT CHILLER & FREEZER

* Top mounted evaporator box for easy access and more space for storage. * Self evaporative defrost water system.

进口压缩机
Secop compressor from Germany
①高效率 ②低能耗 ③低维修率

智能温控器
Smart thermostat
①数字温控 ②精准控温 ③精确到0.1°C

小精灵温控器
Dixell controller
①数字温控 ②精准控温

风循环制冷
Fierce fan cooling circulation
①风冷无霜 ②制冷快速 ③冷气均匀

加厚可调层架
Thickened adjustable shelf
①可调节层架 ②灵活掌控空间

U型门把手设计
U-shaped door handle design
①开关方便 ②不碍事

150mm高的可调子弹脚
150mm high adjustable bullet foot
①可调节子弹脚 ②地面不平也放得稳

GN | GN款高身雪柜系列
GN SERIES AIR-COOLED UPRIGHT CHILLER & FREEZER

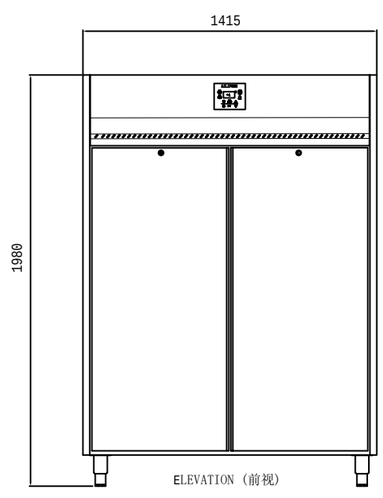

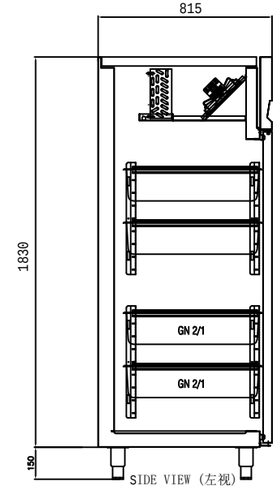

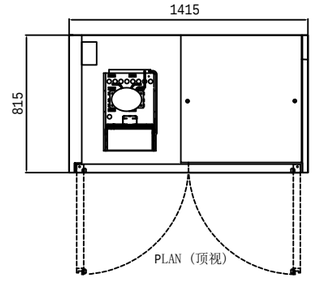

Product advantages
产品优点

镀锌底及背
Galvanized bottom and back

304不锈钢外壳及内胆
304 stainless steel shell and liner

采用150mm高的可调子弹脚
150mm high adjustable bullet foot

自动化水设计
Auto water evaporation system, no need drainage

每个柜室配2对托角和2个PE层网
Auto water evaporation system, no need drainage

适用于2/1GN盘
Suitable for 2/1GN

数字温控
digital temperature control

220V/50Hz

内胆圆弧设计方便清洁
The arc design of the inner tank
is convenient for cleaning

Alternative configuration
备选配置

304不锈钢背
304 stainless steel back

304不锈钢底
304 stainless steel bottom

配灯Lighting

发热玻璃门
Heating glass door

双通门Double-pass door

双通发热膜玻璃门(不适用于低温柜)
Double-pass heating film glass door (not suitable
for low-temperature cabinets)

下门改2抽屉(不适用于低温柜)
Change the door to 2 drawers (not suitable for freezer)

下门改3抽屉(不适用于低温柜)
Change the door to 3 drawers (not suitable for freezer)

轮子Wheel

220V/60Hz

型号 Model	尺寸 Dimension	名称 Titel	制冷 System	温度 Temp ℃	电压 Voltage	雪种 Ref.	容积 Volume
ALPS-0.5L1F	745*815*1980	1 door upright chiller	Air-cooled	+1~+4℃	220V/50Hz	R134a	550L
ALPS-0.5L1FM	745*815*1980	1 door upright chiller	Air-cooled	-2~+2℃	220V/50Hz	R134a	550L
ALPS-0.5L1FD	745*815*1980	1 door upright freezer	Air-cooled	-22~-18℃	220V/50Hz	R404a	550L
ALPS-1.0L2F	1415*815*1980	2 doors upright chiller	Air-cooled	+1~+4℃	220V/50Hz	R134a	1170L
ALPS-1.0L2FM	1415*815*1980	2 doors upright chiller	Air-cooled	-2~+2℃	220V/50Hz	R134a	1170L
ALPS-1.0L2FD	1415*815*1980	2 doors upright freezer	Air-cooled	-22~-18℃	220V/50Hz	R404a	1170L
ALPS-0.5L2F	745*815*1980	2 doors upright chiller	Air-cooled	+1~+4℃	220V/50Hz	R134a	550L
ALPS-0.5L2FM	745*815*1980	2 doors upright chiller	Air-cooled	-2~+2℃	220V/50Hz	R134a	550L
ALPS-0.5L2FD	745*815*1980	2 doors upright freezer	Air-cooled	-22~-18℃	220V/50Hz	R404a	550L
ALPS-1.0L4F	1415*815*1980	4 doors upright chiller	Air-cooled	+1~+4℃	220V/50Hz	R134a	1170L
ALPS-1.0L4FM	1415*815*1980	4 doors upright chiller	Air-cooled	-2~+2℃	220V/50Hz	R134a	1170L
ALPS-1.0L4FD	1415*815*1980	4 doors upright freezer	Air-cooled	-22~-18℃	220V/50Hz	R404a	1170L

GN | GN款平台雪柜系列
GN SERIES AIR-COOLED COUNTER CHILLER & FREEZER

150mm高的可调子弹脚
150mm high adjustable bullet foot
①可调节子弹脚 ②地面不平也放得稳

抽拉式机组设计
Pull-out unit design
①模块化机组设计 ②方便清洁和维修

圆角内胆
Fillet liner
①圆角内胆 ②方便储存 ③易清洁

智能温控器
digital temperature control
①数字温控 ②精准控温 ③精确到0.1℃

适用于1/1GN盘
Suitable for 1/1GN disks

灯光设计
Lighting Design
①高温雪柜配日光灯 ②低温雪柜配LED灯

GN | GN款平台雪柜系列
GN SERIES AIR-COOLED COUNTER CHILLER & FREEZER

Product advantages
产品优点

304不锈钢外壳及内胆
304 stainless steel shell and liner

镀锌底及背
Galvanized bottom and back

采用150mm高的可调子弹脚
150mm high adjustable bullet foot

每个柜室配2对托角和2个PE层网(仅限柜门式)
Each cabinet room is equipped with 2 pairs of brackets and 2 PE layer nets (only for cabinet door type)

适用于1/1GN盘Suitable for 1/1GN

自动化水设计
Auto water evaporation system, no need drainage

数字温控
digital temperature control

220V/50Hz

抽拉式机组设计，便于清洁及维修
Pull-out unit design, easy to clean and maintain

内胆圆弧设计方便清洁
The arc design of the inner tank is convenient for cleaning

Alternative configuration
备选配置

304不锈钢底
304 stainless steel bottom

304不锈钢背
304 stainless steel back

高温雪柜配日光灯
chiller with fluorescent lamp

低温雪柜配LED灯
freezer with LED light

发热玻璃门
heating glass door

双通门
Double-pass door

单门改2抽屉
Single door changed to 2 drawers

单门改3抽屉
Single door changed to 3 drawers

单门改2/3+1/3抽屉
Single door changed to 2/3+1/3 drawer

背挡板Splash back

50mm高踢脚板
50mm high skirting board

不锈钢裙脚
stainless steel foot

轮子wheel

台面开口沙拉槽
countertop salad sink

右边机组right unit

分体机组可选
Split unit optional

220V160Hz

1/1GN平台雪柜系列1/1GN COUNTER CHILLER & FREEZER

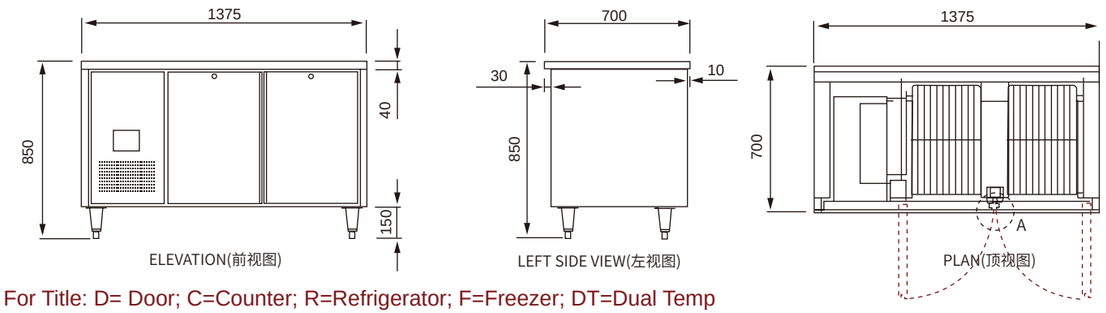

For Title: D= Door; C=Counter; R=Refrigerator; F=Freezer; DT=Dual Temp

型号 Model	尺寸 Dimension	名称 Titel	制冷 System	温度 Temp ℃	电压 Voltage	雪种 Ref.	容积 Volume
ALPS-0.1L1F	910*700*850	1/1gn counter chiller & freezer	Air-cooled	+1~+4℃	220V/50Hz	R134a	128L
ALPS-0.1L1FM	910*700*850	1/1gn counter chiller & freezer	Air-cooled	-2~+2℃	220V/50Hz	R134a	128L
ALPS-0.1L1FD	910*700*850	1/1gn counter chiller & freezer	Air-cooled	-22~-18℃	220V/50Hz	R404a	128L
ALPS-0.3L2F	1375*700*850	1/1gn counter chiller & freezer	Air-cooled	+1~+4℃	220V/50Hz	R134a	280L
ALPS-0.3L2FM	1375*700*850	1/1gn counter chiller & freezer	Air-cooled	-2~+2℃	220V/50Hz	R134a	280L
ALPS-0.3L2FD	1375*700*850	1/1gn counter chiller & freezer	Air-cooled	-22~-18℃	220V/50Hz	R404a	280L
ALPS-0.4L3F	1840*700*850	1/1gn counter chiller & freezer	Air-cooled	+1~+4℃	220V/50Hz	R134a	430L
ALPS-0.4L3FM	1840*700*850	1/1gn counter chiller & freezer	Air-cooled	-2~+2℃	220V/50Hz	R134a	430L
ALPS-0.4L3FD	1840*700*850	1/1gn counter chiller & freezer	Air-cooled	-22~-18℃	220V/50Hz	R404a	430L

2/1GN平台雪柜系列2/1GN COUNTER CHILLER & FREEZER

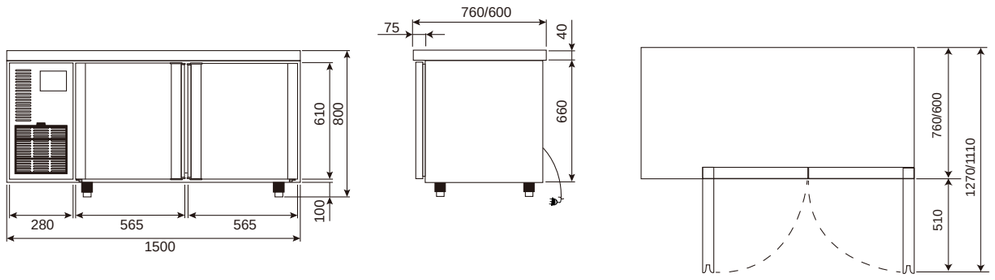

For Title: D= Door; C=Counter; R=Refrigerator; F=Freezer; DT=Dual Temp

型号 Model	尺寸 Dimension	名称 Titel	制冷 System	温度 Temp ℃	电压 Voltage	雪种 Ref.	容积 Volume
ALPS-0.2L1F	1115*770*850	2/1gn counter chiller & freezer	Air-cooled	+1~+4℃	220V/50Hz	R134a	232L
ALPS-0.2L1FM	1115*770*850	2/1gn counter chiller & freezer	Air-cooled	-2~+2℃	220V/50Hz	R134a	232L
ALPS-0.2L1FD	1115*770*850	2/1gn counter chiller & freezer	Air-cooled	-22~-18℃	220V/50Hz	R404a	232L
ALPS-0.4L2F	1785*700*850	2/1gn counter chiller & freezer	Air-cooled	+1~+4℃	220V/50Hz	R134a	492L
ALPS-0.4L2FM	1785*700*850	2/1gn counter chiller & freezer	Air-cooled	-2~+2℃	220V/50Hz	R134a	492L
ALPS-0.4L2FD	1785*700*850	2/1gn counter chiller & freezer	Air-cooled	-22~-18℃	220V/50Hz	R404a	492L

US | US款高身雪柜系列
US SERIES UPRIGHT CHILLER & FREEZER

进口压缩机
EMBRACO
①高效率 ②低能耗 ③低维修率

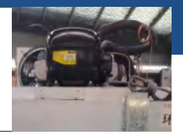

智能温控器
Smart thermostat
①数字温控 ②精准控温 ③精确到0.1°C

风循环制冷
Fierce fan cooling circulation
①风冷无霜 ②制冷快速 ③冷气均匀

加厚可调层架
Thickened adjustable shelf
①可调节层架 ②灵活掌控空间

360°万向轮脚
360 ° universal wheel foot
①带刹车万向轮脚 ②方便移动又稳固

底部压缩机机组
Bottom compressor unit
①易于拿取食物 ②更稳固的重力核心
③外观更简约

US | US款高身雪柜系列
US SERIES UPRIGHT CHILLER & FREEZER

Models	Shelves	Voltage (V/Hz/Ph)	Exterior Dimensions	Capacity	Temperature
ALPS-0.5L1F	3	115/60/1	27x31.7x83.3(4'Castors)inch	8.3 Cu.Ft.	33~45 °F
			685x805x2115(4'Castors)mm	540L	0~8°C
ALPS-0.5L1FD	3	115/60/1	27x31.7x83.3(4'Castors)inch	8.3 Cu.Ft.	-8~1°F
			685x805x2115(4'Castors)mm	540 L	-22~-17°C
ALPS-1.0L2F	6	115/60/1	54.5x31.7x83.3(4'Castors)inch	43.2 Cu.Ft	33~45°F
			1383x805x2115(4'Castors)mm	1250 L	0~8°C
ALPS-1.0L2FD	6	115/60/1	54.5x31.7x83.3(4'Castors)inch	43.2 Cu.Ft	-8~1°F
			1383x805x2115(4'Castors)mm	1250 L	-22~-17°C
ALPS-1.6L3F	9	115/60/1	81.9x31.7x83.3(4'Castors)inch	64.9 Cu.Ft	33~45°F
			2079x805x2115(4'Castors)mm	1930 L	0~8°C
ALPS-1.6L3FD	9	115/60/1	81.9x31.7x83.3(4'Castors)inch	64.9 Cu.Ft	-8~1°F
			2079x805x2115(4'Castors)mm	1930 L	-22~-17°C

US | US款平台雪柜系列
US SERIES COUNTER CHILLER & FREEZER

风冷无霜系统
Air-cooled frost free system
①风冷无霜 ②制冷快速 ③制冷均匀

可选万向轮/子弹脚
Wheel optional
①可调节子弹脚 ②地面不平也放得稳

加厚可调层架
Thickened adjustable shelf
①可调节层架 ②灵活掌控空间

智能温控器
Smart thermostat
①数字温控 ②精准控温 ③精确到0.1°C

后置式压缩机机组
Rear-mounted compressor unit
①节省空间，提高制冷能力
②外观更时尚
③易于维修与清洁

可拆卸密封条
Removable sealing strip
①可拆卸密封条 ②易于清洁

US | US款平台雪柜系列
US SERIES COUNTER CHILLER & FREEZER

Models	Shelves	Voltage (V/Hz/Ph)	Exterior Dimensions	Capacity	Temperature
ALPS-0.1L1F	2	115/60/1	27.5×30×37.2/34.4(5'Castors /2'Castors)inch	43.2 Cu.Ft	33~45°F
			698×760×929 mm	200 L	0~8°C
ALPS-0.1L1FD	2	115/60/1	27.5×30×37.2/34.4(5'Castors /2'Castors)inch	4 Cu.Ft	-8~1°F
			698×760×929 mm	200 L	22~-17°C
ALPS-0.2L2F	2	115/60/1	48.2×30×37.2/34.4(5'Castors/2'Castors)inch	13.4 Cu.Ft.	33~45°F
			1225×760×929 mm	379 L	0~8°C
ALPS-0.2L2FD	2	115/60/1	48.2×30×37.2/34.4(5'Castors/2'Castors)inch	13.4 Cu.Ft.	-8~1°F
			1225×760×929 mm	379 L	-22~-17°C
ALPS-0.3L2F	2	115/60/1	60.2×30×37.2/34.4(5'Castors /2'Castors)inch	17.2 Cu.Ft.	33~45 °F
			1530×760×929 mm	487 L	0~8°C
ALPS-0.3L2FD	2	115/60/1	60.2×30×37.2/34.4(5'Castors /2'Castors)inch	17.2 Cu.Ft.	-8~1°F
			1530×760×929 mm	487 L	-22~-17°C
ALPS-0.4L3F	3	115/60/1	72.7×30×37.2/34.4(5'Castors/2'Castors)inch	21.1 Cu.Ft.	33~45 °F
			1846×760×929 mm	600 L	0~8°C
ALPS-0.4L3FD	3	115/60/1	72.7×30×37.2/34.4(5'Castors/2'Castors)inch	17.2 Cu.Ft.	-8~1°F
			1846×760×929 mm	600 L	-22~-17°C

BAN QUET

宴会冷、热柜
BANQUET CART CHILLER & WARMER

适用于2/1GN盘
Suitable for 2/1GN

智能温控器
Smart Thermostat
①数字温控 ②精准控温

304不锈钢外壳及内胆
304 stainless steel shell and liner steel exterior and interior

150mm高重型
旋转式制动轮子
150mm high heavy-duty swivel brake wheels

内胆圆弧设计方便清洁
The arc design of the inner tank is convenient for cleaning

ALTERNATIVE CONFIGURATION
备选配置

单门配16对托角
Single door with 16 pairs of brackets
双门配32对托角
Double door with 32 pairs of brackets

220~240V/50~60Hz

110V/60Hz

宴会冷、热柜
BANQUET CART CHILLER & WARMER

冷柜系列BANQUET CART CHILLER

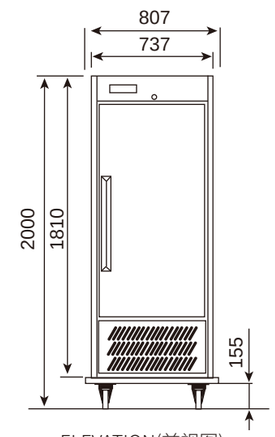

ELEVATION(前视图)

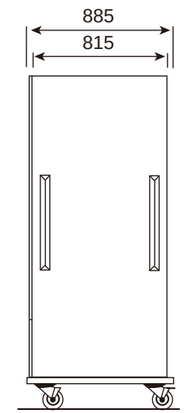

SIDE VIEW(左视图)

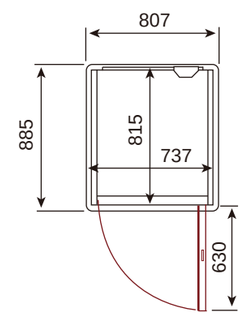

PLAN(顶视图)

热柜系列BANQUET CART WARMER

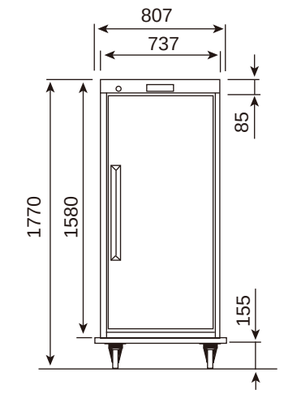

ELEVATION(前视图)

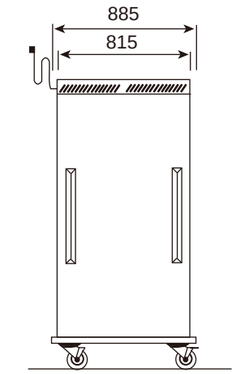

SIDE VIEW(左视图)

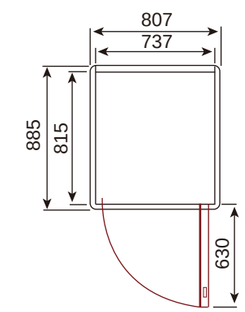

PLAN(顶视图)

For Title: D= Door; B=Banquet; F=Freezer;H=Hot; C=Cabinet。

型号 Model	尺寸 Dimension	名称 Title	制冷 System	温度 Temp℃	电压 Voltage	雪种 Ref.	容积 Volume
ALPS-R1D	807*885*2000	1D B F	Air-cooled	+1~+4℃	220V/50Hz	R134a	495L
ALPS-R2D	1470*885*2000	2D B F	Air-cooled	+1~+4℃	220V/50Hz	R134a	1055L
ALPS-H1D	807*885*1770	1D B H C	——	+78~+82℃	220V/50Hz	——	525L
ALPS-H2D	1470*885*1700	2D B H C	——	+78~+82℃	220V/50Hz	——	1180L

CHEF BASE

炉台柜

CHEF BASE
REFRIGERATOR SERIES

Product advantages
产品特点

304不锈钢外壳及内胆
304 stainless steel shell and liner

镀锌底及背
Galvanized bottom and back

适用于1/1GN盘
Suitable for 1/1GN

自动化水设计
Auto water evaporation system, no need drainage

110V/60Hz

数字温控
digital temperature control

抽拉式机组设计便于清洁及维修
Pull-out unit design, easy to clean and maintain

Alternative configuration
备选配置

304不锈钢底
304 stainless steel bottom

304不锈钢背
304 stainless steel back

右边机组
right unit

分体机组可选
Split unit optional

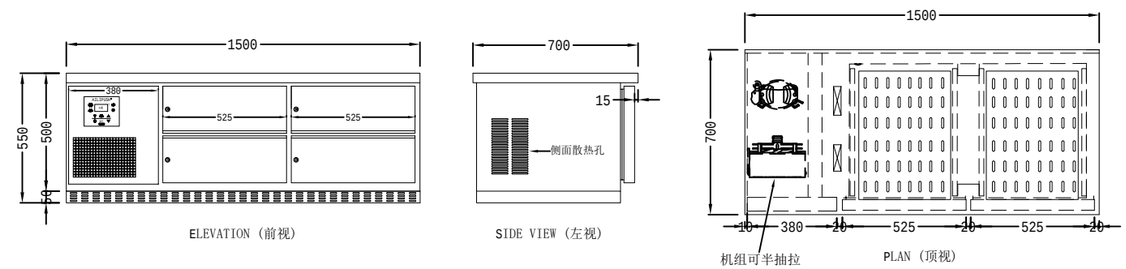

For Title : Dr=Drawer; Cb=Chefbase; R=Refrigerator; F=Freezer

型号 Model	尺寸 Dimension	名称 Title	制冷 System	温度 Temp C	电压 Voltage	雪种 Ref.	容积 Volume
ALPS-1G1NF	1200*700*550	2Dr Cb R	Air-cooled	+1~+4°C	220V/50Hz	R134a	75L
ALPS-1G1NFM	1200*700*550	2Dr Cb R	Air-cooled	-2~+2°C	220V/50Hz	R134a	75L
ALPS-1G2NF	1500*700*550	4Dr Cb R	Air-cooled	+1~+4°C	220V/50Hz	R134a	180L
ALPS-1G2NFM	1500*700*550	4Dr Cb R	Air-cooled	-2~+2°C	220V/50Hz	R134a	180L
ALPS-1G3NF	1800*700*550	6Dr Cb R	Air-cooled	+1~+4°C	220V/50Hz	R134a	250L
ALPS-1G3NFM	1800*700*550	6Dr Cb R	Fan-cooling	-2~+2°C	220V/50Hz	R134a	250L

BLAST FREEZER

速冻柜
BLAST FREEZER

烘焙 Baking

速冻柜急冻 → 冷冻柜储藏 → 醒发箱 → 烤箱

冰淇淋 Ice cream

搅拌器 → 速冻柜急冻 → 冷冻柜储藏 → 冰淇淋展示柜

甜品 Ice cream

烤箱 → 速冻柜急冻 → 冷冻柜储藏

酱料 Sauce

酱料炉 → 速冻柜快速冷却 → 真空包装

烤肉 Roast meat

万能蒸烤箱 → 速冻柜急冻 → 冷冻柜储藏 → 万能蒸烤箱

海鲜 Seafood

速冻柜急冻 → 冷冻柜储藏 → 解冻柜 → 万能蒸烤箱

多功能速冻柜
BLAST FREEZER

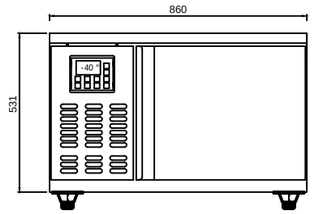

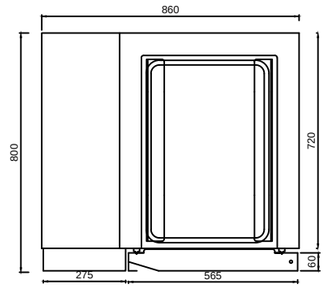

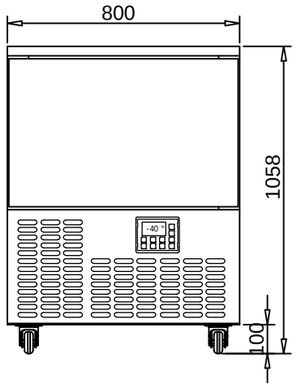

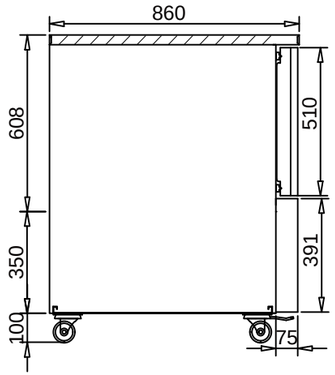

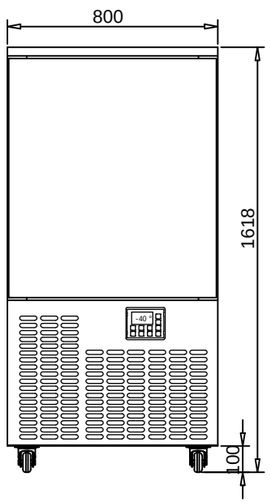

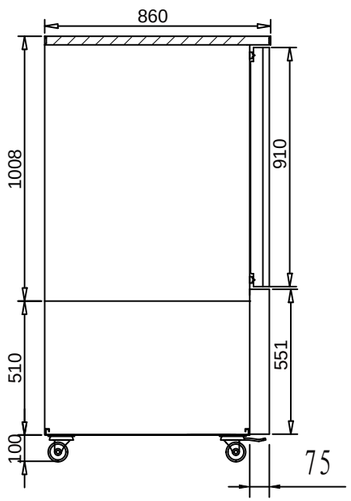

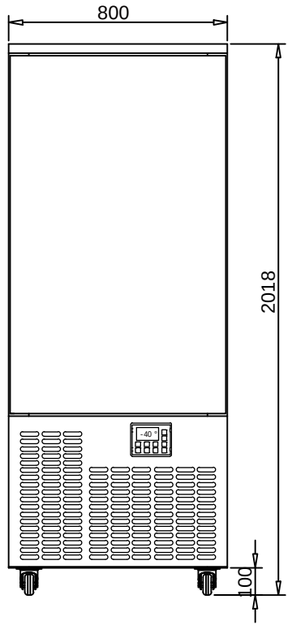

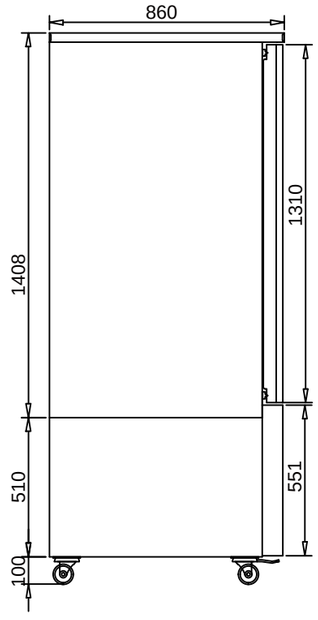

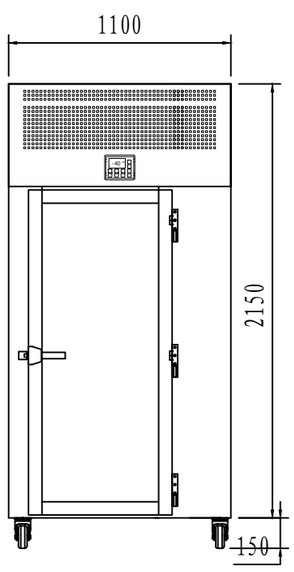

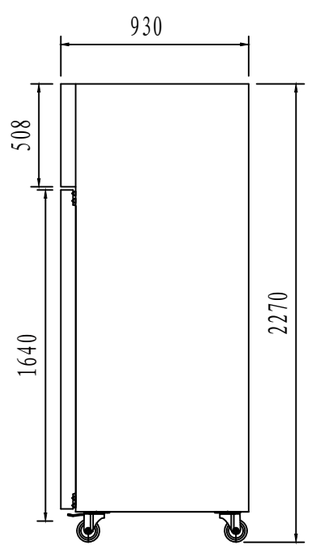

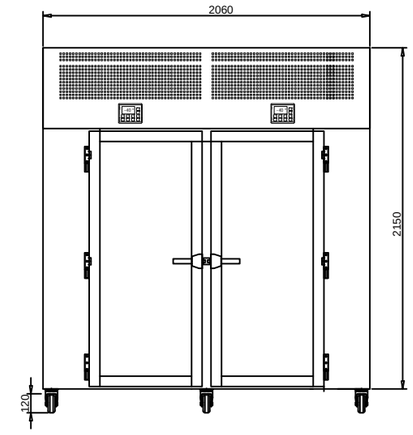

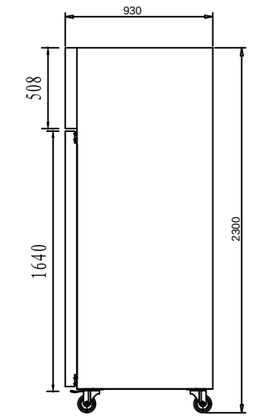

型号 Model	尺寸 Dimension	名称 Title	制冷 System	温度 Temp℃	电压 Voltage	雪种 Ref.	盘 trays
LN-E3B	860*800*586	Blast Freezer	Air-cooled	+3℃~-40℃	220V/50HZ	R290/R-404a	3trays
LN-E5B	800*870*960	Blast Freezer	Air-cooled	+3℃~-40℃	220V/50HZ	R290/R-404a	5trays
LN-E10B	800*870*1590	Blast Freezer	Air-cooled	+3℃~-40℃	220V/50HZ	R290/R-404a	10trays
LN-E15B	800*870*1990	Blast Freezer	Air-cooled	+3℃~-40℃	220V/380V/50HZ	R290/R-404a	15trays
LN-E20B	1550*8701590	Blast Freezer	Air-cooled	+3℃~-40℃	220V/380V/50HZ	R290/R-404a	22trays
LN-E30B	1550*870*1990	Blast Freezer	Air-cooled	+3℃~-40℃	220V/380V/50HZ	R290/R-404a	30trays
LN-E15TB	1100*930*2150+100(轮子)	Blast Freezer	Air-cooled	+3℃~-40℃	220V/50HZ	R290/R-404a	15trays
LN-E30T2B	2060*930*2150+100(轮子)	Blast Freezer	Air-cooled	+3℃~-40℃	220V/50HZ	R290/R-404a	30trays
LN-E36T2B	2060*930*2150+100(轮子)	Blast Freezer	Air-cooled	+3℃~-40℃	220V/50HZ	R290/R-404a	36trays

深冷(风冷)速冻柜
BLAST FREEZER

①设备采用欧洲进口泰康\TECUMSEH、北京比泽尔\BITZER等品牌压缩机
①The equipment adopts TAIKANG、TECUMSEH、BITZER and other brand compressors

②深层冷冻:+90度至-18度/240分钟
②Deep freezing: +90°C to -18°C / 240 minutes

③快速冷冻:+90至+3度/90分钟
③Quick freezing: +90°C to +3 °C/90 minutes

④本产品适用于餐饮、甜品、烘焙、冰激凌等行业。
④This product is suitable for catering, desserts, baking,ice cream and other industries.

型号 Model	尺寸 Dimension	制冷 System	温度 Temp ℃	电压 Voltage	雪种 Ref.	盘 trays
LN-SCE5B	850*890*1060	Air-cooled	+3℃~-60/-80℃	220V/50HZ	R-404a/R-23	5trays
LN-SCE10B	850*890*1660	Air-cooled	+3℃~-60/-80℃	220V/380V/50Hz	R-404a/R-23	10trays
LN-SCE15B	850*890*2060	Air-cooled	+3℃~-60/-80℃	380V/50HZ	R-404a/R-23	15trays
LN-SCE15TB	1100*930*2150+100(轮子)	Air-cooled	+3℃~-60/-80℃	380V/50HZ	R-404a/R-23	15trays
LN-SCE30T2B	2060*930*2150+100(轮子)	Air-cooled	+3℃~-60/-80℃	380V/50HZ	R-404a/R-23	30trays
LN-SCE36T2B	2060*930*2150+100(轮子)	Air-cooled	+3℃~-60/-80℃	380V/50HZ	R-404a/R-23	36trays

深冷(风冷)速冻柜
BLAST FREEZER

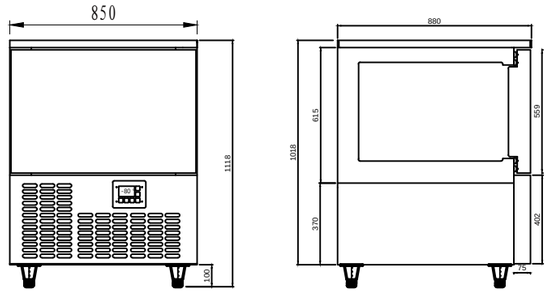

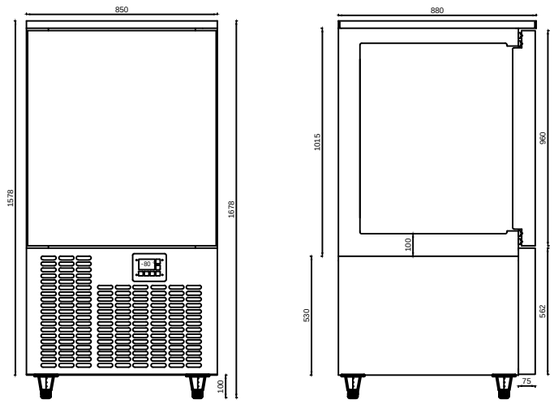

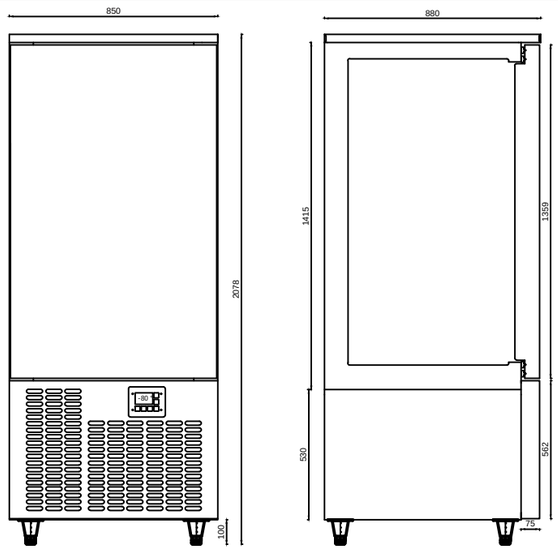

PUSH-IN FRIDGE

推入式雪柜系列
PUSH-IN FRIDGE & FREEZER SERIES

Product advantages
产品优点

自动化水设计
Self evaporating, condensation water drainage not required

304不锈钢外壳及内胆
304 grade stainless steel exterior and intorior

适用于2/1GN推车
Accommodale 2/1 GN size

数字温控
Digital Controllen

220~240V/50~60Hz

内胆圆弧设计方便清洁
The liner arc design is convenient to clean

Alternative configuration
备选配置

304不锈钢背
304 stainless steel back

配日光灯或LED灯
With fluorescent or LED lights

发热膜玻璃门
Heated glass door in lieu of stainless sleel door

双通门
Roll through door

1.5mm厚底板
1.5mm floor panel

配斜坡
Ramp with insulaled floor

柜门弹簧锁
Latch door lock

110V/60Hz

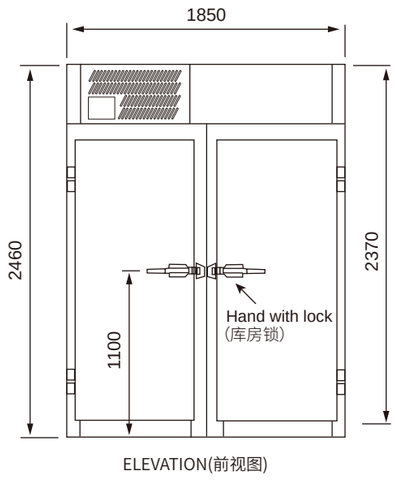

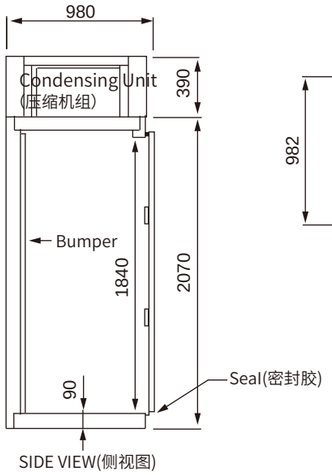

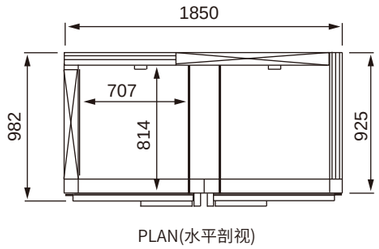

For Title：D=Door；PT=Pass Through；WI=ROLL-In；R=Refrigerator; F=Freezer

型号 Model	尺寸 Dimension	名称 Title	制冷 System	温度 Temp℃	电压 Voltage	雪种 Ref.	容积 Volume
ALPS-P1F	905*980*2460	1D WI R	Air-cooled	+1~+4℃	220V/50Hz	R134a	1035L
ALPS-P1FM	905*980*2460	1D WI R	Air-cooled	-2~+2℃	220V/50Hz	R134a	1035L
ALPS-P1FD	905*980*2460	1D WI F	Air-cooled	-22~-18℃	220V/50Hz	R404a	1035L
ALPS-P2F	1850*980*2460	2D WI R	Air-cooled	+1~+4℃	220V/50Hz	R134a	2450L
ALPS-P2FM	1850*980*2460	2D WI R	Air-cooled	-2~+2℃	220V/50Hz	R134a	2450L
ALPS-P2FD	1850*980*2460	2D WI F	Air-cooled	-22~-18℃	220V/50Hz	R404a	2450L
ALPS-P1F-PT	905*980*2460	1D PT WI R	Air-cooled	+1~+4℃	220V/50Hz	R134a	1090L
ALPS-P1FM-PT	905*980*2460	1D PT WI R	Air-cooled	-2~+2℃	220V/50Hz	R134a	1090L
ALPS-P1FD-PT	905*980*2460	1D PT WI F	Air-cooled	-22~-18℃	220V/50Hz	R404a	1090L
ALPS-P2F-PT	1850*980*2460	2D PT WI R	Air-cooled	+1~+4℃	220V/50Hz	R134a	2590L
ALPS-P2FM-PT	1850*980*2460	2D PT WI R	Air-cooled	-2~+2℃	220V/50Hz	R134a	2590L
ALPS-P2FD-PT	1850*980*2460	2D PT WI F	Air-cooled	-22~-18℃	220V/50Hz	R404a	2590L

BEVE RAGE

饮料展示柜
BEVERAGE COOLER SERIES

双层充氩气镀膜玻璃
Filled with double glazed
Argon gas sliding doors
①美观耐用 ②透视新鲜

风冷无霜，自动蒸发霜水
Self evaporating, condensation
water drainage not required
①制冷快速 ②冷气均匀

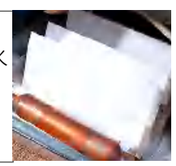

304不锈钢外壳及
304BA镜钢内胆
304 grade stainless steel exterior
and 340 grade BA mirror stanless
steel interior
①耐腐蚀 ②易清洁

智能温控器
Smart Thermostat
①数字温控 ②精准控温

PRODUCT FEATURES
产品优点

自动化水设计
Self evaporating, condensation
water drainage not required

镀锌底及背
Galvanized steel back and base

柜门配圆锁
Fitted with fluorescent lamp

配日光灯
Fitted with fluorescent lamp

220~240V/50~60Hz

内胆圆弧设计方便清洁
The liner arc design is convenient to clean

ALTERNATIVE
备选配置

304不锈钢背板
304 stainless steel back

304不锈钢底板
304 stainles steelbase

黑色外壳
Black colour bond exterior

黑色背板
Black colour bond back

不锈钢实心门
Stainless steel solid door

改为高身饮品柜

柜身高度为900mm(带台面)
Changes as upright beverage display coolers

110V/60Hz

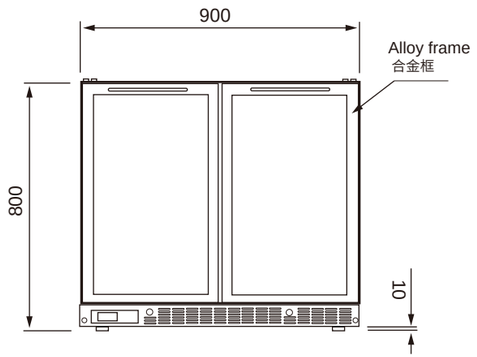

ELEVATION (前视图)

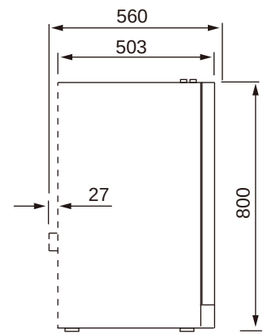

LEFT SIDE VIEW (左视图)

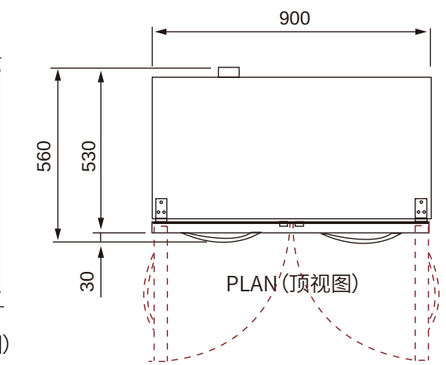

型号 Model	尺寸 Dimension	名称 Title	制冷 System	温度 Temp℃	电压 Voltage	雪种 Ref.	容积 Volume
ALPS-BC1GD	600*560*800	1 door beer refrigerator	Air-cooled	+2~+8℃	220V/50Hz	R134a	115L
ALPS-BC2GD	900*560*800	2 door beer refrigerator	Air-cooled	+2~+8℃	220V/50Hz	R134a	170L
ALPS-BC3GD	1350*560*800	3 door beer refrigerator	Air-cooled	+2~+8℃	220V/50Hz	R134a	268L
ALPS-BR1GD	600*560*900	1 door beer refrigerator	Air-cooled	+2~+8℃	220V/50Hz	R134a	120L
ALPS-BR2GD	900*560*900	2 door beer refrigerator	Air-cooled	+2~+8℃	220V/50Hz	R134a	180L
ALPS-BR3GD	1350*560*900	3 door beer refrigerator	Air-cooled	+2~+8℃	220V/50Hz	R134a	278L

WINE FRIDGE

红酒展示柜系列
WINE FRIDGE DISPLAY

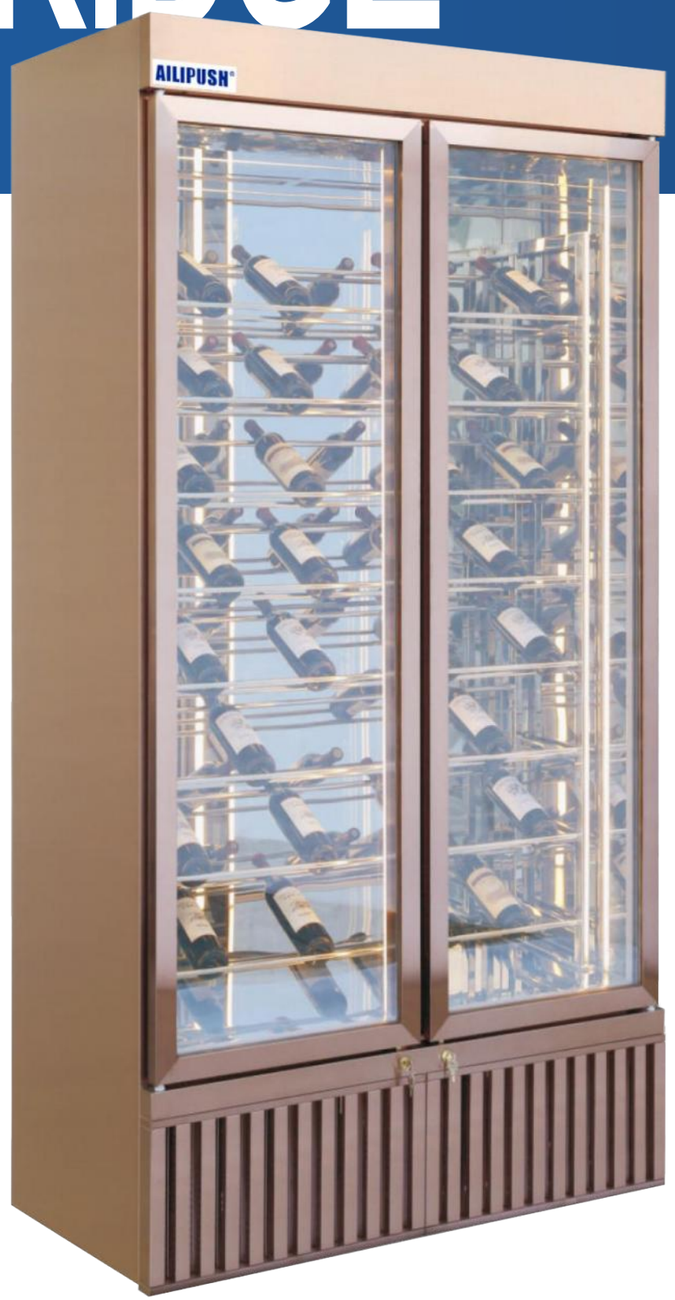

PRODUCT FEATURES
产品优点

酒柜内配LED照明灯
Built-in LED lighting

顶部蒸发器可拆卸
Removable top evaporator section

操作简便的数字控制面板配搭故障提示系統
Digital controller for easy operation and fail-safe performance, featuring clear digital display

配置化水装置, 无需连接排水管
Defrost water-Vvaporiser, drain connection not required

门边发热线防止冷凝水的产生
Anti-condensation door/ drawer frame heaters

有效率的风冷系统
Efficient forced air cooling system

220~240V/50~60Hz

内胆圆弧设计方便清洁
The liner arc design is convenient to clean

电镀不锈钢酒架(酒瓶摆放方式可选)
Slanted chrome coated stainiess steel wine rack
(different orientations avaitable)

ALTERNATIVE
备选配置

分体式及整体式机组
Available in remote or self-contained condensing unit

柜门配圆锁、电磁锁及客户指定锁
Cylindrical lock, magnetic Lock or any customised Lock for door

底部可配花纹装饰玻璃
Floral pattern decorative glass in base section

不同颜色和板材可选
Different colors and finishes

所有可见边V-Cut
V-cut for all visible bends

单、双、三、四面玻璃可选
Choice of 1-, 25 3-or 4-sides glass

遥控式LED灯控制器可选
Remote system for LED light

遥控式亮度调节器可选
Remote system for light intensity

110V/60Hz

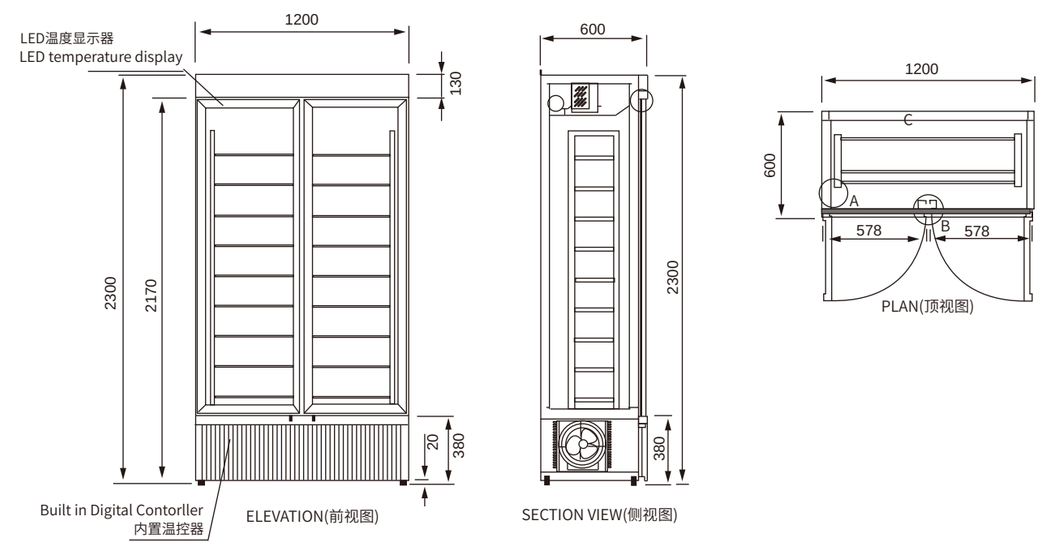

型号 Model	尺寸 Dimension	名称 Title	制冷 System	温度 Temp℃	电压 Voltage	雪种 Ref.	容积 Volume
ALPS-WE1GD	600*600*2300	1 door wine cellar	Air-cooled	+12~+18℃	220V/50Hz	R134a	45Bottles
ALPS-WE2GD	1200*600*2300	2 door wine cellar	Air-cooled	+12~+18℃	220V/50Hz	R134a	117Bottles
ALPS-WE3GD	1800*600*2300	3 door wine cellar	Air-cooled	+12~+18℃	220V/50Hz	R134a	171Bottles

饮料展示柜
BEVERAGE DISPLAY

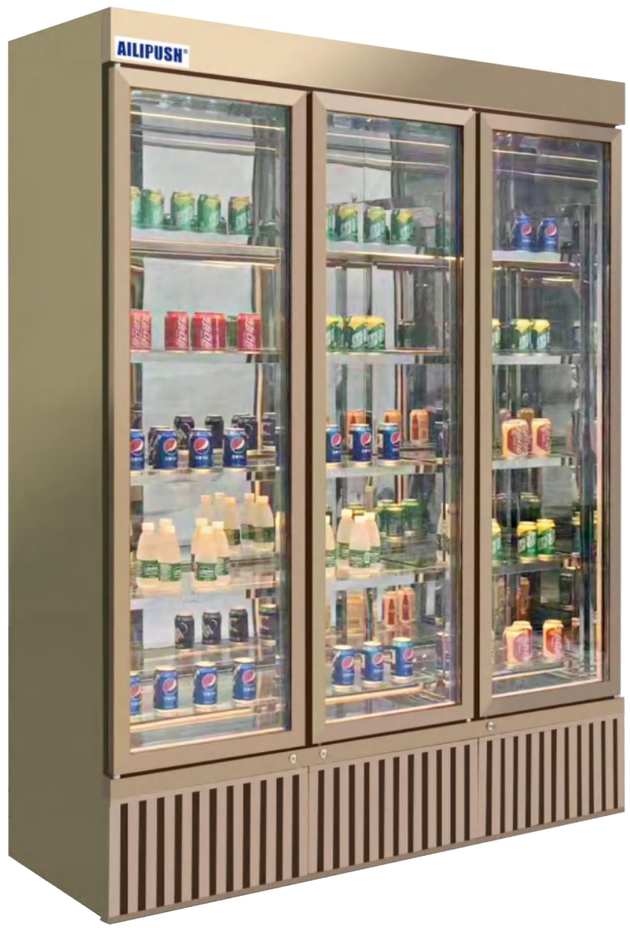

产品规格Product Specification

①制冷方式:风冷
① Cooling system: air cooling

②温度范围:+2~+8°C
②Temperature range: +2~+8°C

③压缩机功率:1/2HP(思科普)
③Compressor power: 1/2HP (Secop)

④制冷剂:R134a
④ Refrigerant: R134a

⑤温控:数字温控
⑤Temperature control: digital temperature control

⑥玻璃规格:双层中空钢化发热玻璃
⑥Glass specifications: double-layer hollow tempered heating glass

⑦灯:LED-light-2700K(暖黄LED灯)
⑦Light: LED-light-2700K (warm yellow LED light)

⑧亮度调节器
⑧Brightness adjuster

⑨层架:镜钢架1x Custom Mirror
⑨Shelf: mirror steel frame 1x Custom Mirror

⑩单层强化超白玻璃层板4x
⑩Single-layer strengthened ultra-clear glass laminate 4x

材料Material

①内部材料:镜钢
①Inner Material: Mirror S/S

②底部材料:锌铁
②Bottom material: Zinc iron

③外部材料:镜钢
③External material: MirrorS/S

④背部材料:锌铁
④Back material: Zinc iron

⑤外型尺寸:(1200x600x2130(W*D*Hmm)
⑤Dimensions: (1200x600x2130(W*D*Hmm)

⑥自动化水
⑥Automatic evaparation

型号 Model	尺寸 Dimension	名称 Title	制冷 System	温度 Temp C	电压 Voltage	雪种 Ref.	容积 Volume
ALPS-DC1GD	600*600*2130	Beverage Display	Air-cooled	2~8°C	220V/50Hz	R134a	500L
ALPS-DC2GD	1200*600*2130	Beverage Display	Air-cooled	2~8°C	220V/50Hz	R134a	1000L
ALPS-DC3GD	1800*600*2130	Beverage Display	Air-cooled	2~8°C	220V/50Hz	R134a	1600L

饮料展示柜示意图
Beverage display drawings

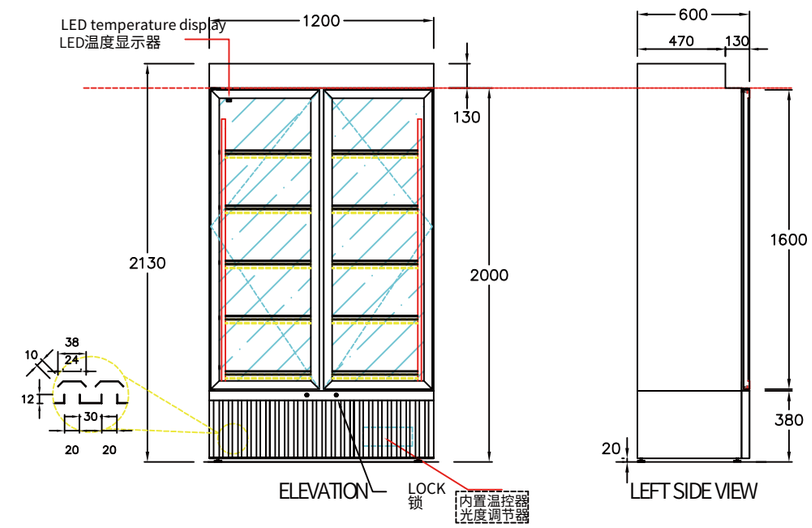

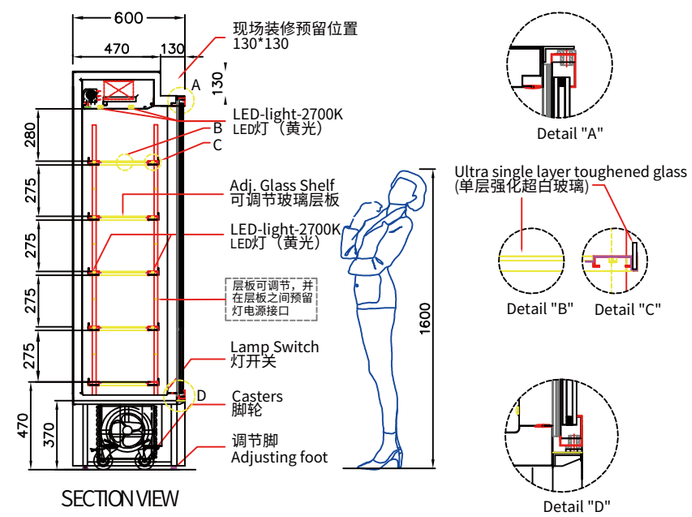

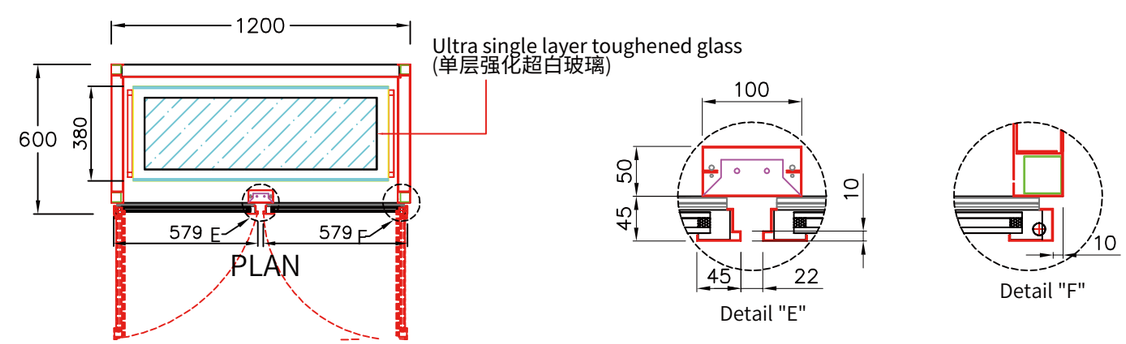

ICE CREAM

落地式单排冰淇淋展示柜

SINGLE ROW ICE CREAM SHOWCASE

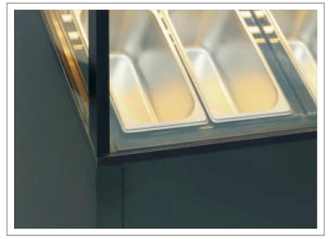

Product advantages
产品优点

外观精美的双层超白钢化除雾玻璃
Beautifully -looking double-layer super-white tempereddefogging glass

暖白色LED灯带
Warm white LED strip lighting

顶前玻璃45°角接驳
45 degree angled edges for top and front glass

嵌入式配固定百叶
Built-in type with die-punched type louver

玻璃趟门配不锈钢门框
Glass sliding doors with stainless steel frame on the operator's side

操作簡便的数字控制面板配搭故障提示系統
Digital controller for easy operation and fail-safe perlormance,featuring clear digital display

自动除霜
Automatic defrost

配置化水装置，无需连接排水管
Defrost water-Vaporiser, drain connection not required

220~240V/50~60Hz

Alternative configuration
备选配置

双层强化玻璃加发热膜
Double layer toughened glass with heated film

不同颜色和板材可选
Different colors and finishes"V-cut for all visible bends

所有可见边V-Cut
V-cut for all visible bends

趟门可做双层发热玻璃
Optional double layer glasses with heated film sliding door

110V/60Hz

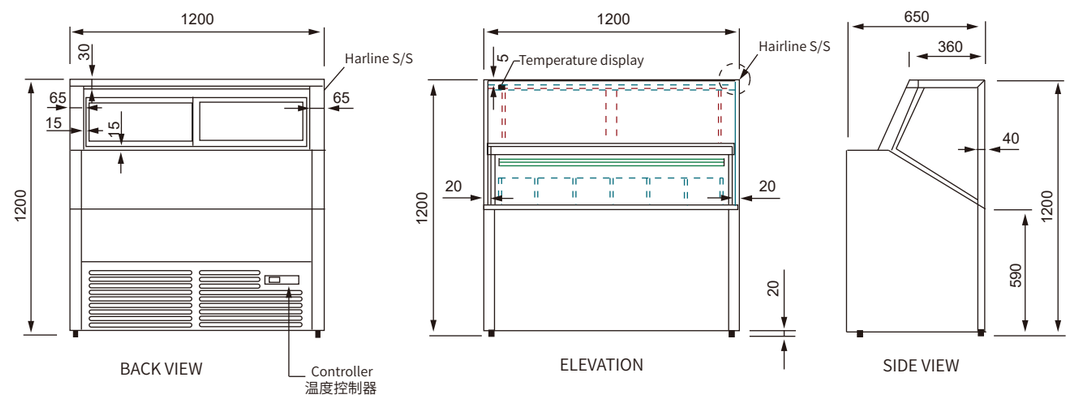

型号 Model	尺寸 Dimension	名称 Title	制冷 System	温度 Temp ℃	电压 Voltage	雪种 Ref.
ALPS-LK0.9GD	900*650*1200	0.9m Ice Cream Showcase	Air-cooled	-22°C-18°C	220V/50Hz	R404a
ALPS-LK1.2GD	1200*650*1200	1.2m Ice Cream Showcase	Air-cooled	-22°C-18°C	220V/50Hz	R404a
ALPS-LK1.5GD	1500*650*1200	1.5m Ice Cream Showcase	Air-cooled	-22°C-18°C	220V/50Hz	R404a
ALPS-LK1.8GD	1800*650*1200	1.8m Ice Cream Showcase	Air-cooled	-22°C-18°C	220V/50Hz	R404a

ICE CREAM

冰淇淋展示柜
Gelator Showcase Freezer

Product advantages
产品优点

LED灯覆盖,柜内通透明亮;灯光全部遮掩,无刺眼现象
LED light in illumination,avoiding glaring

高精度轻触式电子温控器,精确控制柜内温度
Accurate digital controller, precise working temperature displaye

高品质进口压缩机,节能,低噪音
High quality imported Compressor, energy saving and low noise

带刹活动脚轮,移动方便
Baked castors for easy movin

前面全部使用钢化镀膜发热玻璃,杜绝玻璃凝水现象
ITO toughened heated glass, anti condensation and energy saving, and good visual effect

导风结构优化,使柜内上下温度保持一致
Improved forced air cooling system ensure effective air circulation

自动化霜系统,化霜水自动蒸发
Automatic defrost ensure the evaporator working to its optimum pertormance.Automatic vaporizing the delrosted water

外装饰有黑色和白色大理石以及不锈钢可供选择,美观实用
Black/ white man-made marble and #304 Stainless steel finished exterior decoration for choice, beautiful and practical

型号 Model	温度范围 Temp Range	尺寸 Dimension	可置1/3盆数 Q'ty of 1/3GN pan	功率 power	净重(KG) Net .
ALPS-ICG09	-18~-22℃	900*750*1250	4	980	/
ALPS-ICG12	-18~-22℃	1260*750*1250	6	1050	/
ALPS-ICG16	-18~-22℃	1610*750*1250	8	1330	/
ALPS-ICG19	-18~-22℃	1985*750*1250	10	1650	/

CAKE DISPLAY

蛋糕展示柜系列
CAKE DISPLAY SERIES

PRODUCT FEATURES
产品优点

极具现代感双层超白钢化除雾玻璃
Modern double-layer super-white tempered defogging glass

顶前玻璃45°角接驳
45 degree angled edges for top ang front glass

暖白色LED灯带
Warm white LED strip lighting

玻璃趟门配不锈钢门框
Glass sliding doors with stainless steel frame on the operator's side

循环气流设计防止食物变干
Export design for air movement to prevent food drying

高密度发泡层
Precision injection, high density polyurethane insulation

操作简便的数字控制面板配搭故障提示系统
Digital controlter for easy operation and fail-safe performance,fealuring clear digital display

自动除霜
Automatic defrost

配置化水装置，无需连接排水管
Defrost water-vaporiser, drain connection not required

有效率的风冷循环系统
Efficient forced air cooling system

220~240V/50~60Hz

ALTERNATIVE
备选配置

经典珠宝柜式设计
Classicjeweiry design

V-Cut可见边位
V-cut for all visible bends

V-Cut百叶
V-cut louveri

趟门可做双层发热玻璃
Optional double layer glasses with heated film sliding doors

不同颜色和板材可选
Different colors and finishes

110V/60Hz

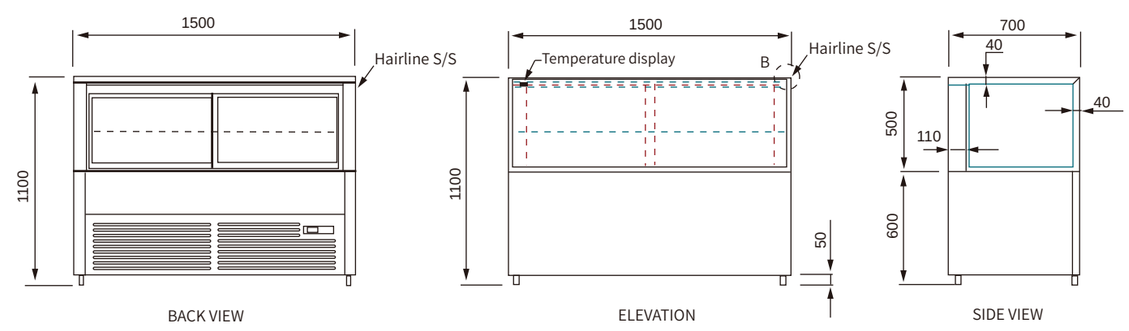

型号 Model	尺寸 Dimension	名称 Title	制冷 System	温度 Temp ℃	电压 Voltage	雪种 Ref.
ALPS-CK0.9GD	900*700*1100	0.9m cake Showcase	Air-cooled	+2℃~+8℃	220V/50Hz	R134a
ALPS-CK1.2GD	1200*700*1100	1.2m cake Showcase	Air-cooled	+2℃~+8℃	220V/50Hz	R134a
ALPS-CK1.5GD	1500*700*1100	1.5m cake Showcase	Air-cooled	+2℃~+8℃	220V/50Hz	R134a
ALPS-CK1.8GD	1800*700*1100	1.8m cake Showcase	Air-cooled	+2℃~+8℃	220V/50Hz	R134a

SUSHI DISPLAY

寿司展示柜系列
SUSHI DISPLAY CABINET SERIES

PRODUCT FEATURES
产品优点

外观精美的玻璃展示柜
Contemporary rectangular shaped double layer ultra clear glass case withheating film showcase

玻璃趟门配不锈钢门框
Glass sliding doors with stainless steel frame on the operator's side

双层超白钢化除雾玻璃
Double layer super white toughened defogging glass

顶前玻璃45°角接驳
45 degree angledl

暖白色LED灯带
Warm white LED strip lighting

所有可见边V-cut
All visible bends are V-out

静置冷却保持食物的水分
Static cooling refrigeration system prevents d rying out of the products

最长8m的分体机组连接
Remole refrigeration system with maximum 8 meters pipe length connection

需连接排水管
Drain connection is required

操作简便的数字控制面板配搭故障提示系统
Digital controller for easy operation and fall-safe performance, featuringclear digital display

220~240V/50~60Hz

ALTERNATIVE
备选配置

双层一体玻璃可选
Doubte layer toughened glass

趟门可做双层发热玻璃
Optional double layer glasses with heated film sliding doors

不同颜色和板材可选
Different colors and finishes

110V/60Hz

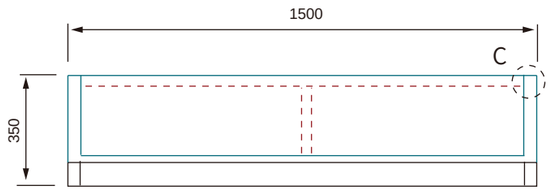

BACK VIEW

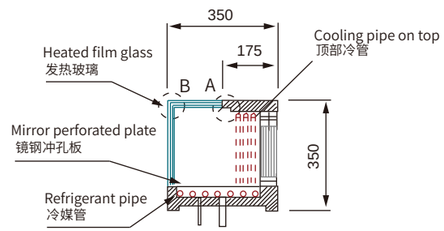

SECTION

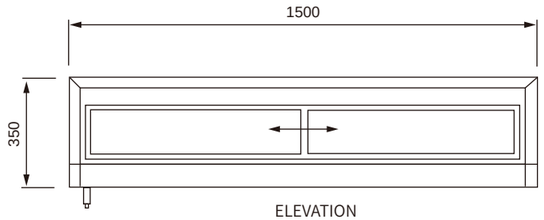

ELEVATION

型号 Model	尺寸 Dimension	名称 Title	制冷 System	温度 Temp C	电压 Voltage	雪种 Ref.
ALPS-SC1.2GD	1200*350*350	1.2m Sushi Showcase	Air-cooled	+2°C~+8°C	220V/50Hz	R134a
ALPS-SC1.5GD	1500*350*350	1.5m Sushi Showcase	Air-cooled	+2°C~+8°C	220V/50Hz	R134a
ALPS-SC1.8GD	1800*350*350	1.8m Sushi Showcase	Air-cooled	+2°C~+8°C	220V/50Hz	R134a

AIR CURTAIN

风幕柜系列
AIR CURTAIN CABINET SERIES

PRODUCT FEATURES
产品优点

采用优质的不锈钢，高品质保温材料，符合国家节能环保要求
Adopt high quality stainless steel, high quality thermal insulationmaterials, in line with the National energy conservation and environmental protection requirements.

温度性能稳定，每层温度均匀，覆盖每一个角落制冷速度快
Temperature stability, each layer of temperature is uniform,covering every corner, cooling speed

选用原装进口压缩机，故障率低
Selection of original imported compressors with low failure rate

采用防凝露设计
Use of agglutinant design

能让食物保持新鲜状态，延长新鲜寿命达到均衡完美的保鲜效果
Can keep food fresh state to extend fresh life, achieve a baianced and perfect preservation effect

广泛用在超市、蛋糕店、奶茶店、五星级酒店自助餐厅
Widely used in supermarkels, cake shops, milk tea shops, five-starhotel cafeterias

220~240V/50~60Hz

ALTERNATIVE
备选配置

层架倾斜角度可选
Layers tilt angle optional

趟门或幕帘可选
Door or curtain available

侧面玻璃或发泡箱体可选
Side glass or foaming box body optional

材质及材料颜色可以选
Material and Material Colors Available

110V/60Hz

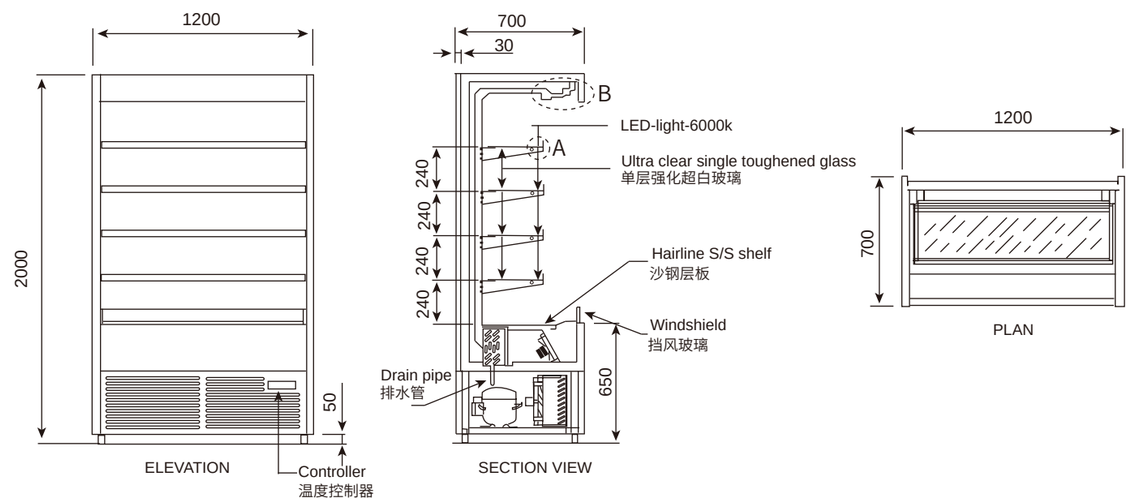

型号 Model	尺寸 Dimension	名称 Title	制冷 System	温度 Temp℃	电压 Voltage	雪种 Ref.
ALPS-FM0.9GD	900*700*2000	0.9m Air Curtain Showcase	Air-cooled	+2℃~+8℃	220V/50Hz	R134a
ALPS-FM1.2GD	1200*700*2000	1.2m Air Curtain Showcase	Air-cooled	+2℃~+8℃	220V/50Hz	R134a
ALPS-FM1.5GD	1500*700*2000	1.5m Air Curtain Showcase	Air-cooled	+2℃~+8℃	220V/50Hz	R134a

RIPENING 牛肉熟成

AGED BEEF

干式熟成牛肉 成熟西餐厅之选
Dry-aged beef, the choice of mature western restaurants

肉质细腻 01
Delicate meat
熟成过程中，蛋白酵素慢慢分解牛肉中的纤维，肉质逐渐软化，提升牛肉的嫩度。
During the aging process, protease slowly decomposes the fiber in the beef, the meat gradually softens, and the tenderness of the beef is improved.

口感多汁 02
Juicy
熟成牛肉汁油花集中，所以使得牛肉甜而多汁，入口即化。
The mature beef juice is concentrated, so the beef is sweet and juicy, and it melts in the mouth.

风味醇厚 03
Full-bodied flavor
干式熟成的牛肉带有蘑菇的鲜香，牛奶的香甜，以及芝士的浓郁香气。
The dry-aged beef has the fresh aroma of mushrooms, the sweetness of milk, and the rich aroma of cheese.

烹饪酥脆 04
Crispy
杠式熟成牛肉更容易上色，并产生酥脆外皮，达到外脆内嫩的口感。
Bar-aged beef is easier to color, and produces a crispy outer skin, achieving a crispy outside and tender inside.

牛肉熟成柜
承载好牛肉熟成之旅

BEEF AGING CABINETHOST A GOOD BEEF AGING JOURNEY

熟成牛肉表层肉色逐渐变暗淡 The color of the surface layer of mature beef gradually becomes dull

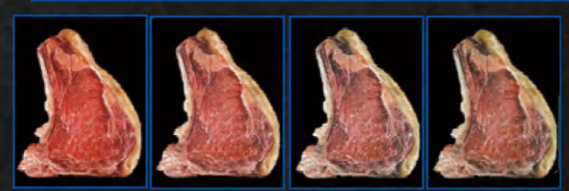

熟成7天 matured for 7 days | 熟成14天 matured for 14 days | 熟成21天 matured for 21 days | 熟成30天 matured for 30 days

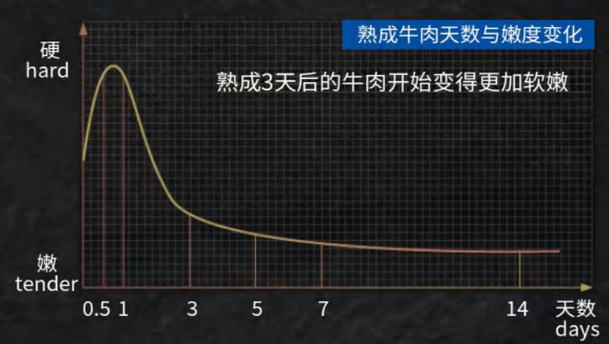

RIPENING 牛肉熟成技术

BEEF AGING TECHNOLOGY

风味更加 口感更好的牛肉
Beef with more flavor and better texture

精准、稳定控温系统 Accurate and stable temperature control system

牛肉熟成需要在恒定的温度(-1.5°-4°都是合适的温度)，湿度(60%-85%)及通风条件下，随着时间慢慢提升牛肉的品质。牛肉熟成柜恒定的电子温控-5~10°C可调温控范围，并可保持在某个温度1°°C误差内。

Beef maturation needs to be under constant temperature (-1.5°C-4°C is a suitable temperature), humidity (60%-85%) and ventilation conditions, and slowly improve the quality of beef over time.The constant electronic temperature control of the beef aging cabinet is -5~10°C adjustable temperature control range, and can be kept at a certain temperature within 1°C error.

精准控温
Precise temperature control
-5-10°C
±1°C

独立的湿度控制Independent Humidity Control

恒定的内部湿度，湿度在60%-85%之间，前端有水位观测端，对要不要加水一目了然
Constant internal humidity, the humidity is between 60% and 85%, and there is a water level observation terminal at the front, so it is clear at a glance whether to add water

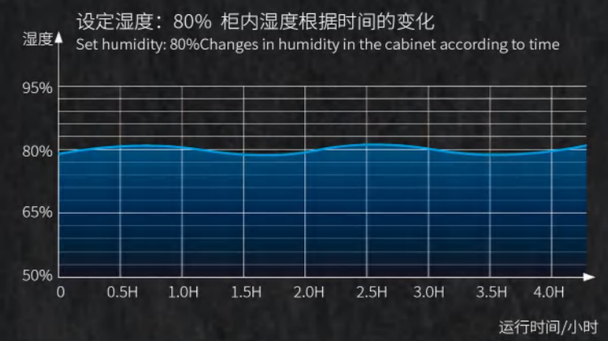

短波UVC强效杀菌Short-wave UVC powerful sterilization

专业的 UVC 杀菌作用，具有全自动工作的状态，每天自动启动杀菌一小时，当柜门打开时候会关闭该功能，避免人体皮肤受到辐射，保护人身的安全，柜门关闭时候又会自动启动杀菌功能，不需要人为操作。

Professional UVC sterilizing effect, with fully automatic working state, automatically start the sterilization for one hour every day, when the cabinet door is opened, this function will be turned off, to avoid human skin from radiation, protect personal safety, and automatically start the s terilization when the cabinet door is closed without manual operation.

光谱波长254mm的紫外线，属于短波UVC灭菌紫外线，很容易被生物体的DNA吸收，是消毒杀菌的的好选择。
Ultraviolet rays with a spectral wavelength of 254mm belong to short-wave UVC sterilizing ultraviolet rays, which are easily absorbed by the DNA of organisms and are a good choice for disinfection and sterilization.

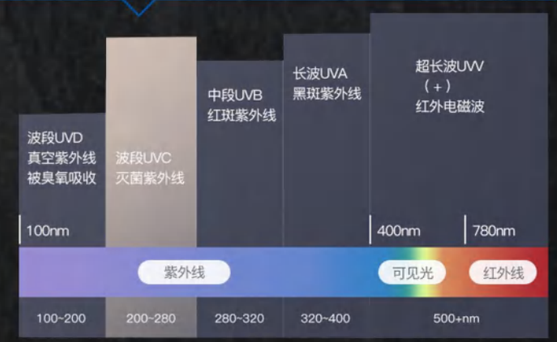

牛肉展示柜
BEEF DISPLAY CABINET SERIES

工作环境设计Work environment

①温度32°C湿度65%
①Temperature 32°C Humidity 65%

②底置式制冷系统设计，安装维修极其方便
② Bottom-mounted refrigeration system design, extremely convenient for installation and maintenance

③60mm厚度的高密度环保隔热层，节能省电
③60mm thick high-density environmental protection heat insulation layer, saving energy and electricity

④环保无氟制冷剂R134a
④Environmentally friendly fluorine-free refrigerant R134a

⑤内外箱体可选镜面/黑钛/不锈钢板材
⑤Mirror surface/black titanium/stainless steel plate can be selected for inner and outer cabinets

⑥高效节能进口压缩机
⑥High-efficiency and energy-saving imported compressor

⑦智能数字控温器，带湿度显示
⑦Intelligent digital temperature controller with humidity display

⑧4D均冷技术，后背式出风中空电加热除雾玻璃门
⑧4D uniform cooling technology, back-type air-out hollow electric heating defogging glass door

⑨智能除霜系统
⑨Intelligent defrosting system

⑩上下可调搁物架设计自动排水和蒸发系统
⑩Up and down adjustable shelf design, automatic drainage and evaporation system

⑪内箱圆角和下沉式底板设计，易于清洁
⑪Inner box rounded corners and sunken floor design, easy to clean

⑫自动回归门体设计
⑫Automatic return door body design

可选定制内容
Optional custom content

可以根据不同个性需求，
选择不同样式酒柜风格
According to different individual needs,choose from different styles of wine cabinets

此款式可定制:
This style can be customized:

恒温酒柜、果蔬柜、烧腊风干柜、
解冻柜、冻品冷冻展示柜等
Constant temperature wine cabinet, fruit and vegetable cabinet, roast meat air drying cabinet,Thawing cabinets, frozen product display cabinets, etc.

型号 Model	尺寸 Dimension	名称 Name	温度范围 Temperature	容积 volume	功率 power	制冷剂 Ref.	制冷 System
ALPS07C1	700*760*2100	Beef Display Cabinet Series	-2°C～-5°C	5层	1050	R404a	Air-cooled
ALPS07D1	700*760*2100	Beef Display Cabinet Series	-12°C～-18°C	5层	1200	R404a	Air-cooled
ALPS12C2	1200*760*2100	Beef Display Cabinet Series	-2°C～-5°C	5层	1680	R404a	Air-cooled
ALPS12D2	1200*760*2100	Beef Display Cabinet Series	-12°C～-18°C	5层	1800	R404a	Air-cooled
ALPS15C2	1500*760*2100	Beef Display Cabinet Series	-2°C～-5°C	5层	2080	R404a	Air-cooled
ALPS15D2	1500*760*2100	Beef Display Cabinet Series	-12°C～-18°C	5层	2205	R404a	Air-cooled
ALPS18C3	1800*760*2100	Beef Display Cabinet Series	-2°C～-5°C	5层	2270	R404a	Air-cooled
ALPS18D3	1800*760*2100	Beef Display Cabinet Series	-12°C～-18°C	5层	2395	R404a	Air-cooled

牛肉熟成柜
BEEF AGING CABINET SERIES

工作环境设计Work environment

①温度32°C，湿度65%
①Temperature 32°C, humidity 65%

②欧洲整体式制冷系统设计，安装维修方便
② European integrated refrigeration system design, easy installation and maintenance

③60mm厚度的高密度环保隔热层，节能省电
③60mm thick high-density environmental protection heat insulation layer, saving energy and electricity

④环保无氟制冷剂 R134a
④Environmentally friendly fluorine-free refrigerant R134a

⑤内外箱体201#联众不锈钢板材
⑤ 201 stainless steel plate inside and outside the box

⑥上下可调搁物架设计
⑥Up and down adjustable shelf design

⑦智能除霜自动蒸发化霜水系统
⑦Intelligent defrosting automatic evaporation system

⑧自动回归玻璃门，豪华2层中空玻璃门
⑧ Automatic return glass door, luxury 2-layer hollow glass door

⑨可拆换和易清洁的密封条
⑨Removable and easy-to-clean sealing strip

⑩高效节能压缩机，智能数字温度控制器和高速低噪风机
⑩High-efficiency energy-saving compressor, intelligent digital temperature controland high-speed low-noise fans

型号 Model	尺寸 Dimension	温度范围 Temperature	制冷 System	容积 volume	功率 power	制冷剂 Ref.	装柜数量 Qty/20GP	装柜数量 Qty/40HQ
ALPS-S100	700*730+50*1650	1°C~4°C	Air-cooled	400	160	R134a	21	42

定制 | 晾鸭风干柜
DUCK DRYING CABINET

工作环境设计Work environment

①温度32°C 湿度65%
①Temperature 32°C Humidity 65%

②欧洲整体式制冷系统设计，安装维修方便
② European integrated refrigeration system design, easy installation and maintenance

③60mm 厚度的高密度环保隔热层，节能省电
③60mm thick high-density environmental protection heat insulation layer, saving energy and electricity

④环保无氟制冷剂 R134a
④Environmentally friendly fluorine-free refrigerant R134a

⑤内外箱体 201# 联众不锈钢板材
⑤ Inner and outer box 201# stainless steel plate

⑥上下可调搁物架设计
⑥Up and down adjustable shelf design

⑦高效节能压缩机，智能数字温度控制器和高速低噪风机
⑦ High-efficiency energy-saving compressor, intelligent digital temperature controller and high-speed low-noise fan

⑧智能除霜自动蒸发化霜水系统
⑧Intelligent defrosting automatic evaporation system

⑨可随时开关的箱内 LED 照明和灯箱
⑨ LED lighting and light box that can be switched on and off at any time

⑩自动回归玻璃门，豪华 2层中空玻璃门
⑩Automatic return glass door, luxury 2-layer hollow glass door

⑪可拆换和易清洁的密封条
⑪Removable and easy-to-clean sealing strip

型号 Model	尺寸 Dimension	温度范围 Temperature	制冷 System	容积 volume	功率 power	气候类型 Climate type	制冷剂 Ref.
ALPS-700	700*800*2080	+5°C~+10°C	Air-cooled	550L	682	N	R290(R134a/R404aoptional)
ALPS-1200	1200*800*2080	+5°C~+10°C	Air-cooled	1050L	860	N	R290(R134a/R404aoptional)
ALPS-1800	1800*800*2080	+5°C~+10°C	Air-cooled	1600	1255	N	R290(R134a/R404aoptional)

定制 | 烧腊柜
ROAST MEAT CABINET

工作环境设计Work environment

①温度32°C湿度65%
①Temperature 32°C Humidity 65%

②欧洲整体式制冷系统设计，安装维修方便
② European integrated refrigeration system design, easy installation and maintenance

③60mm厚度的高密度环保隔热层，节能省电
③60mm thick high-density environmental protection heat insulation layer, saving energy and electricity

④环保无氟制冷剂R134a
④Environmentally friendly fluorine-free refrigerant R134a

⑤内外箱体201#联众不锈钢板材
⑤ 201# stainless steel plate inside and outside the box

⑥上下可调搁物架设计
⑥Up and down adjustable shelf design

⑦智能除霜自动蒸发化霜水系统
⑦Intelligent defrosting automatic evaporation system

⑧可随时开关的箱内LED照明和灯箱
⑧ LED lighting and light boxes that can be switched on and off at any time

⑨自动回归玻璃门，豪华2层中空玻璃门
⑨ Automatic return glass door, luxury 2-layer hollow glass door

⑩可拆换和易清洁的密封条
⑩Removable and easy-to-clean sealing strip

⑪高效节能压缩机，智能数字温度控制器和高速低噪风机
⑪High-efficiency energy-saving compressor, intelligent digital temperature controller and high-speed low-noise fan

型号 Model	尺寸 Dimension	温度范围 Temperature	制冷 System	容积 volume	功率 power	气候类型 Climate type	门数 Number of disks	挂杆数 Number of hanging rods	制冷剂 Ref.
ALPS-LP680	700*800*2300	+2~+8	Air-cooled	700	400	N(32)	1	6	R134a
ALPS-LP1400	1400*800*2300	+2~+8	Air-cooled	1200	980	N(32)	2	6	R134a
ALPS-LP2100	2100*800*2300	+2~+8	Air-cooled	1200	980	N(32)	3	6	R134a

定制 | 发酵箱
PROOFER

工作环境设计Work environment

①发酵可预设时间，使其从冷冻/冷藏状态变为发酵状态
①Proofer can be preset for a predetermined time to transition from frozen/refrigerated state to fermentative state

②电子控制面板，智能醒发控制，冷藏发酵箱自动转换，告别每天必须早起发酵面团的麻烦
②Electronic control panel,intelligent fermentative control,automatic conversion of refrigeration and proofer,bid farewell to the trouble of having to wake up early every day to ferment dough

③ 聚氨酯材质发泡，发泡厚度可达55mm
③ Polyurethane material foaming.Foaming thickness up to 55mm

④ 24小时用水大概一瓶矿泉水左右
④ The 24th water consumption is about one bottle of mineral water

电源Power Supply
220V/50HZ(220V/60HZ,110V/60HZ)

压缩机Compressor
泰康Tecumseh/丹佛斯Danfoss

制冷剂Refrigerant
R134a

型号 Model	盘数 Tray	功率 Power source	制冷功率 Power	醒发功率 Power	冷藏温度 Refr.	冷冻温度 Freezing	醒发温度 Proofer	产品尺寸 Dimensions
YH-18DR(单门)	18	50Hz-220V	0.6	1.2	2~5	0~-15	15~38	600*960*2105
YH-24DR(单门)	24	50Hz-220V	0.8	1.6	2~5	0~-15	15~38	780*1150*1700
YH-36DF(上下门)	36	50Hz-220V	0.8	1.6	2~5	0~-15	15~38	755*1150*2105
YH-36DS(双门)	36	50Hz-220V	0.8	1.8	2~5	0~-15	15~38	1150*930*2105

定制 | 解冻柜
THAWING CABINET

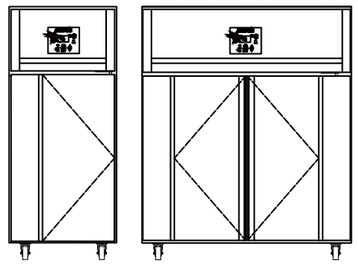

工作环境设计Work environment

①强劲热风及冷风交替循环，解冻后保持温度0°C到+3°C
① Alternate circulation of strong hot air and cold air,After thawing, keep the temperature from 0°C to +3°C

②解冻过程中食物不会超过+3°C，保证食物安全
②The food will not exceed +3°C during the thawing process to ensure food safety

③ 微电脑智能温控系统，精确控温确保解冻过程中食材质量安全
③Microcomputer intelligent temperature control system, precise temperature control to ensure the quality and safety of ingredients during thawing

④ 环保型无氟制冷剂(R134a),高密度隔温发泡层
④ Environmentally friendly fluorine-free refrigerant (R134a), high-density thermal insulation foam layer

⑤ 一体拉伸底盘,圆边圆角,易清洁,符合国际卫生标准
⑤ One-piece stretch chassis, rounded edges and corners, easy to clean, in line with international hygiene standards

⑥可拆卸门封，易清洁保养
⑥Removable door seal, easy to clean and maintain

⑦发器表面电镀耐腐蚀涂层，耐腐蚀性强，经久耐用
⑦ The surface of the hair dryer is electroplated with a corrosion-resistant coating, which is highly corrosion-resistant and durable

⑧自动化霜
⑧Automatic frosting system

⑨自动化水，无需外接排水
⑨Automatic evaporation system, no need for external drainage

⑩符合HACCP食品安全管理体系
⑩ Comply with HACCP food safety management system

型号 Model	分类 Classification	规格（mm) Dimensions	功率 (W) Power	容积 (L) Net capacity	温度范围 (°C) Temperature
ALPS-TC1	Thawing Cabinet	835*760*1965	1000W	372	0~+3°C
ALPS-TC1	Thawing Cabinet	1625*760*1965	1900W	744	0~+3°C

定制 | 储鱼柜
FISH STORAGE CABINET

工作环境设计Work environment

①内外304不锈钢，底背环保镀锌板
① 304 stainless steel inside and outside, environmentally friendly galvanized plate on the bottom and back

②可拆卸门封,易清洁保养
②Removable door seal, easy to clean and maintain

③开门小于90°可自动回位
③The door can be automatically returned when the door is opened less than 90°

④门框隐藏发热线，防凝露
④The door frame hides the heating wire and prevents condensation

⑤ 内部放置7个390x580x135m盆
⑤ Place 7 pots of 390x580x135m inside

⑥进口压缩机
⑥Secop compressor from Germany

⑦可拆卸门封,易清洁保养
⑦ Removable door seal, easy to clean and maintain

⑧柜体底部排水管道，清洁效率最大化
⑧ Drainage pipes at the bottom of the cabinet to maximize cleaning efficiency

⑨环保无氯制冷剂
⑨ Environmentally friendly chlorine-free refrigerant

⑩制冷机组可上置可下置
⑩ Refrigeration unit can be set up or down

⑪符合HACCP食品安全管理体系
⑪ Comply with HACCP food safety management system

型号 Model	尺寸 Dimension	温度范围 Temperature	开门深度 Door opening depth	容积 volume	功率 power	散热量 Heat output	制冷剂 Ref.
ALPS-EF1B	580*730*1800	-2-+2	1180	321	660	485	R134a
ALPS-EF1T	580*730*1800	-2-+2	1180	321	960	485	R134a

定制 | 冰台
ICE PLATFORM

工作环境设计Work environment

①温度 32°C，湿度65%
①Temperature 32°C, humidity 65%

②高密度环保隔热层，节能省电
②High-density environmental protection heat insulation layer, energy-saving and power-saving

③环保无氟制冷剂 R404a
③Environmentally friendly fluorine-free refrigerant R404a

④内外箱体使用高档 304 不锈钢板材
④ The inner and outer boxes are made of high-grade 304 stainless steel plate

⑤高效节能压缩机，智能数字温度控制器
⑤High-efficiency energy-saving compressor, intelligent digital temperature controller

⑥全铜管冷凝、蒸发盘管设计
⑥All copper tube condensation and evaporation coil design

⑦8mm 钢化玻璃围栏，防护展示一体
⑦8mm tempered glass fence, integrated protection and display

⑧高度可调的高档不锈钢子弹脚
⑧Height-adjustable high-grade stainless steel bullet feet

型号 Model	尺寸 Dimension	温度范围 Temperature	制冷 System	容积 volume	功率 power	气候类型 Climate type	制冷剂 Ref.
ALPS-IBT15	1500*800*800	0~+10	Static cooling	/	650	N(32)	R404a
ALPS-IBT18	1800*800*800	0~+10	Static cooling	/	750	N(32)	R404a
ALPS-IBT20	2000*800*800	0~+10	Static cooling	/	850	N(32)	R404a

定制 | 挂墙柜
WALL MOUNTED CABINET

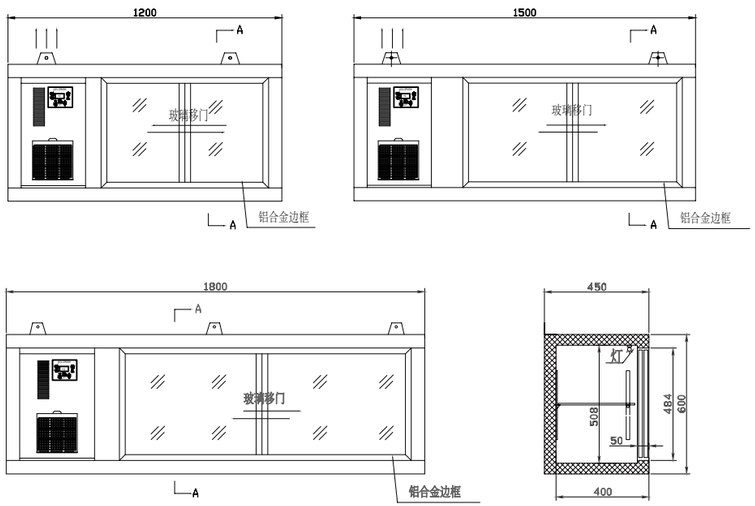

型号 Model	尺寸 Dimension	名称 Name	温度范围 Temperature	制冷 System	容积 volume	功率 power	层架数 Number of shelves	制冷剂 Ref.
ALPS-12L2	1200*450*600	wall mounted cabinet	2~8°C	Static cooling	210	280	2	R290/R134a
ALPS-15L2	1500*450*600	wall mounted cabinet	2~8°C	Static cooling	260	300	2	R290/R134a
ALPS-18L2	1800*450*600	wall mounted cabinet	2~8°C	Static cooling	310	380	2	R290/R134a
ALPS-12L2W	1200*450*600	wall mounted cabinet	2~8°C	Air-cooled	200	300	2	R290/R134a
ALPS-15L2W	1500*450*600	wall mounted cabinet	2~8°C	Air-cooled	250	340	2	R290/R134a
ALPS-18L2W	1800*450*600	wall mounted cabinet	2~8°C	Air-cooled	300	420	2	R290/R134a

定制 | 冻眠速冻柜(瞬冻柜)
LIQUIDNESS BLSAT FREEZER

工作环境设计Work environment

①采用液态鲜冻技术,对产品进行360°环绕浸泡式快速冷冻,温度可达-60°C
① Using liquid fresh freezeing technology ,the product is rapidly frozen by 360° surround soaking, and the temperature can mach -60°C

②快速让食材锁水冷冻,保存新鲜品质
②Quickly freeze ingredients in water to presence fresh quality

③解冻后的水分子与冻结前相同状态解冻,因此食材的鲜度、口味、营养皆保持原来的状态
③ After thawing,the water molecules are thawed in the same state as before freezing,so the freshness ttaste and nutrition of the ingredients remain in the original state

④本产品适用于:活冻鱼类、各类海鲜产品
④This product is suitable for live frozen fish,all kind of seafood products

电压频率Voltage(V)
AC220V2N~/50Hz,380V 3N~/50Hz

制冷方式Cooling type
流体循环直冷

制冷剂Refrigerant
R-404a/R23

型号 Model	速冻能力 Freezing capacity	功率 Power	容积 Volume	有效冷冻容积 Freezing Volume	温度 Temp.	尺寸 Dimension	制冷剂 Ref.	净重 Net weight
BL-SOAK8K/-40	8KG/H	800W	13L	10L	3~-40	760*455*495	R-404a	40
BL-SOAK12K/-40	25KG/H	2700W	136L	87L	3~-40	930*870*1170	R-404a	140
BL-SOAK12K/-60	35KG/H	5200W	136L	87L	3~-60	930*870*1170	R-404a/R23	180
BL-SOAK25K/-40	50KG/H	4800W	348L	208L	3~-40	2000*870*1050	R-404a	450
BL-SOAK25K/-60	65KG/H	9600W	348L	208L	3~-60	2000*870*1050	R-404a/R23	500

星级酒店
Star Hotels

品牌连锁
Brand Chain

工程部分案例
Engineering Cases

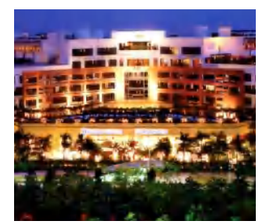
洲际酒店

花园酒店

曙光酒店

宝盛酒店

柏景酒店

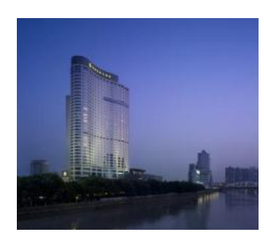
香格里拉酒店

喜来登酒店

希尔顿酒店

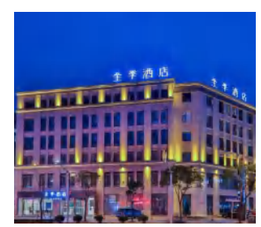
全季酒店

维也纳酒店

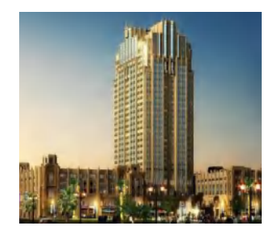
中海凯骊酒店

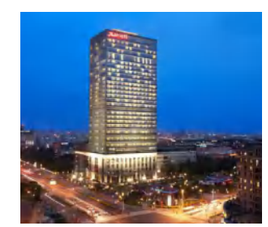
万豪酒店

企事业单位
Enterprises and Institutions

广州白云机场 Guangzhou Baiyun airport
中石化集团 Sinopec group
深圳大学 Shenzhen University
江门阳江一中 Jiangmen yangjiang No. 1 middle school
中山大学 Sun yat-sen University
华南理工大学 South china university Of technology
长沙理工大学 Changsha university Of science andTechnology

山东能源 Shandong Energy
网易 Netease
南方电网 China southern Power grid
中国国网 China state grid
广东工业大学 Guangdong University Of technology
广东外语外贸大学 Guangdong university Of foreign studies
佛山科学技术学院 Foshan institute of science And technology