Ford Transit_22_08

2022

Passenger Van, Long Wheelbase, Med. Roof, Sliding Door

File is %25 of actuel size

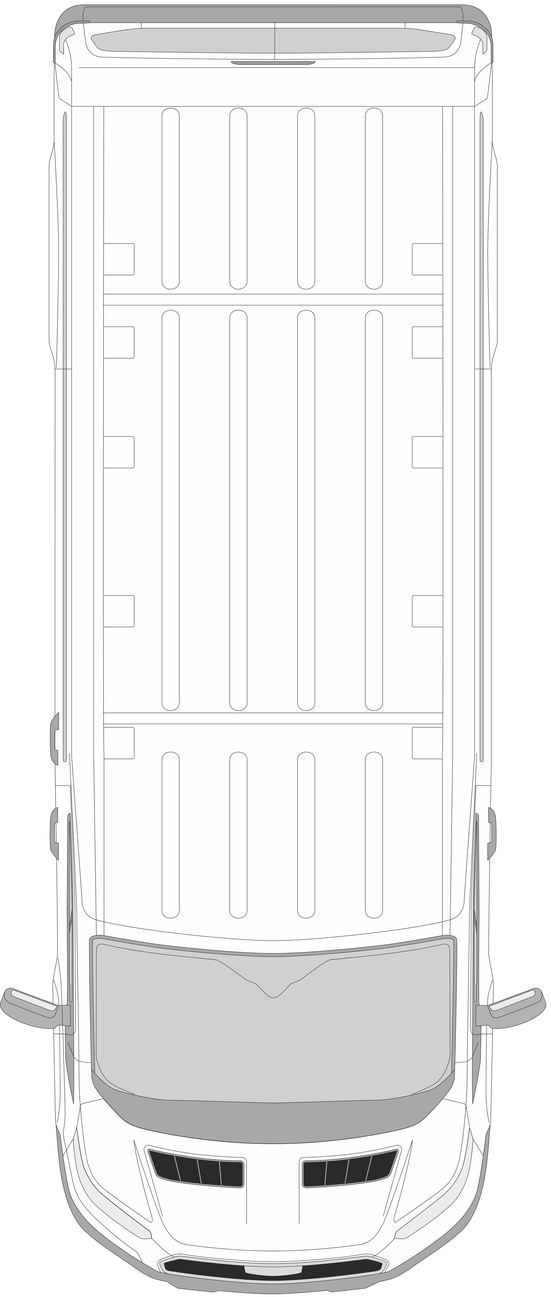

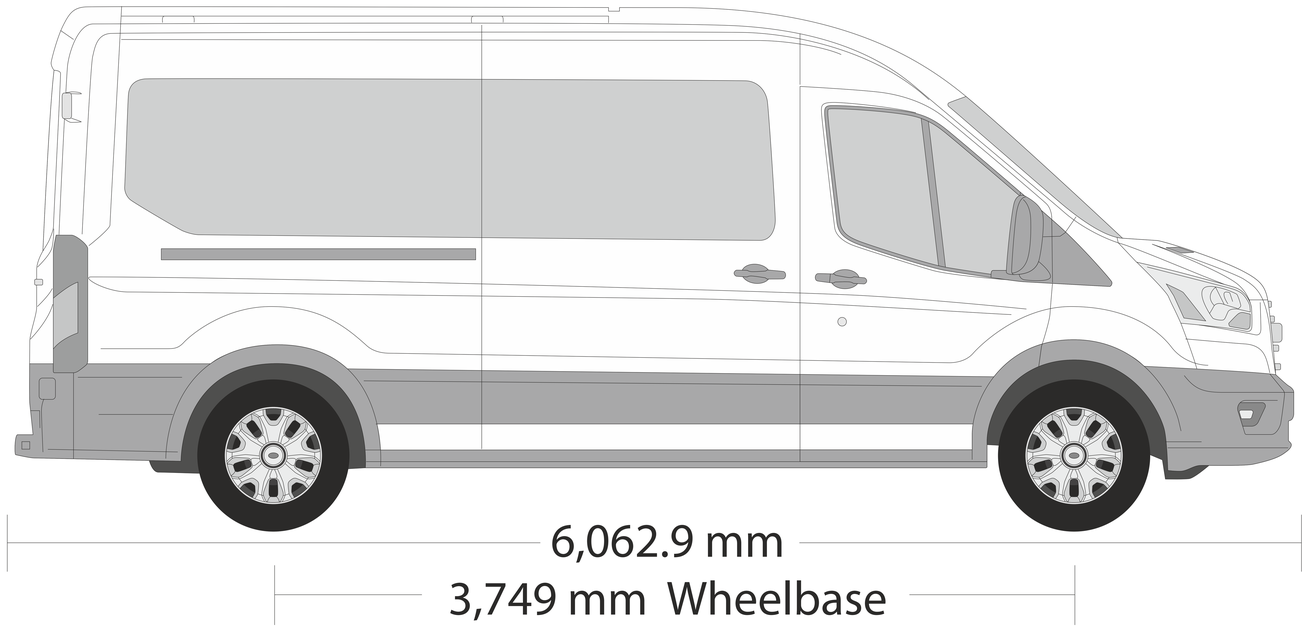

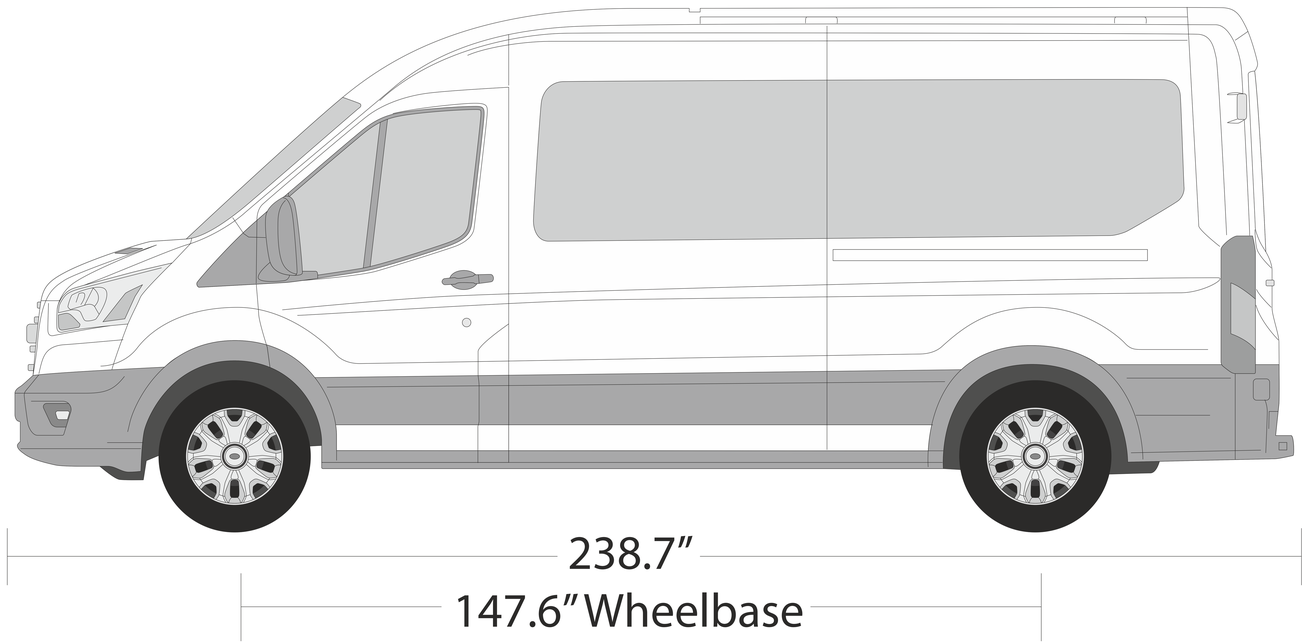

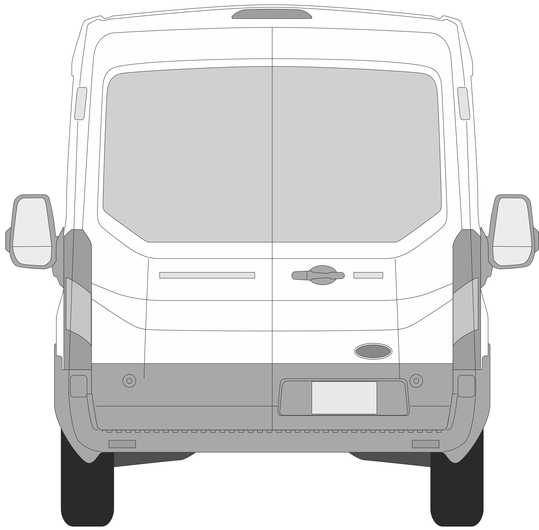

©2021 Art Station Vehicle Templates

1:20 Scale