A scientific calculator is permitted throughout this exercise.

Ex 8.1

Worked Example for Simple Questions

Name: _____

The area of a trapezium is given by:

$$A = \frac{1}{2}(a+b)h$$

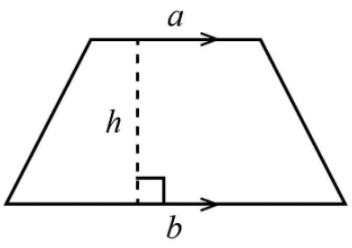

Calculate the area of the trapezium.

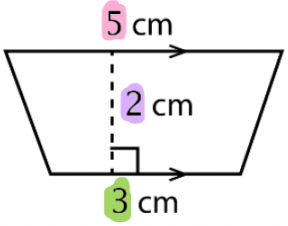

$A = \frac{1}{2} \times (a+b) \times h$

$= \frac{1}{2} \times (3+5) \times 2$

$= 8\ \text{cm}^2$

Area = 8 cm^2

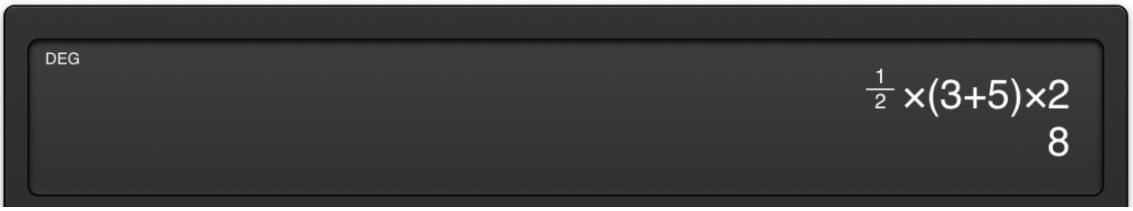

Copyright © Maths Pathway 2025.

Area of a Trapezium

Question 1

The area of a trapezium is given by:

$$A = \frac{1}{2}(a+b)h$$

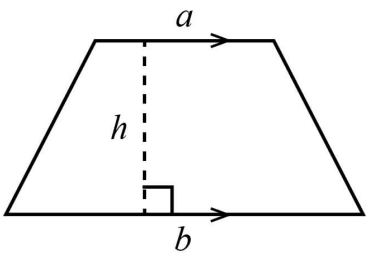

Calculate the area of the trapezium.

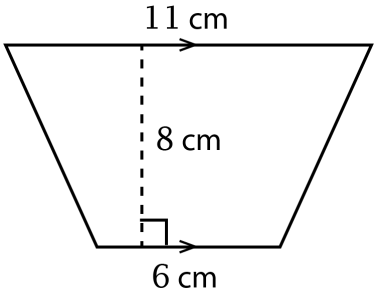

Area = $\square$ cm^2

Copyright © Maths Pathway 2025.

Question 2

The area of a trapezium is given by:

$$A = \frac{1}{2}(a+b)h$$

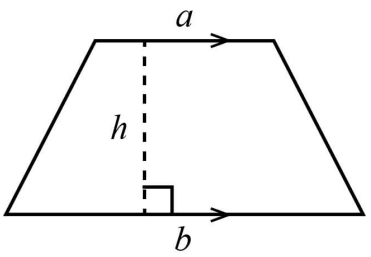

Calculate the area of the trapezium.

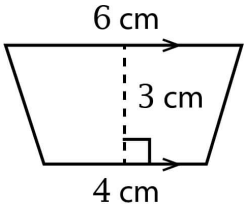

Area = $\square$ cm^2

Question 3

The area of a trapezium is given by:

$$A = \frac{1}{2}(a+b)h$$

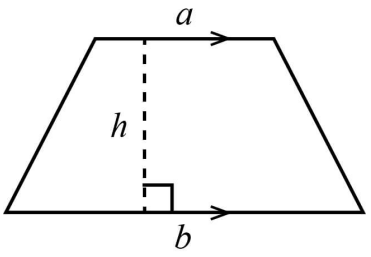

Calculate the area of the trapezium.

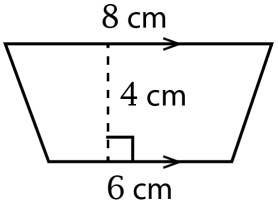

Area = $\square$ cm^2

Copyright © Maths Pathway 2025.

Area of a Trapezium

Question 4

The area of a trapezium is given by:

$$A = \frac{1}{2}(a+b)h$$

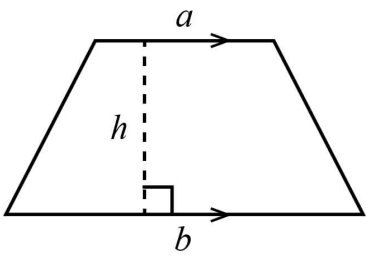

Calculate the area of the trapezium.

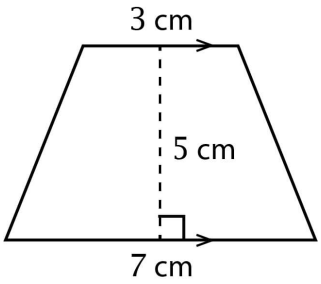

Area = $\square$ cm^2

Copyright © Maths Pathway 2025.

Area of a Trapezium

Question 5

The area of a trapezium is given by:

$$A = \frac{1}{2}(a+b)h$$

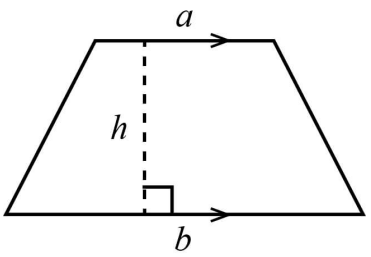

Calculate the area of the trapezium.

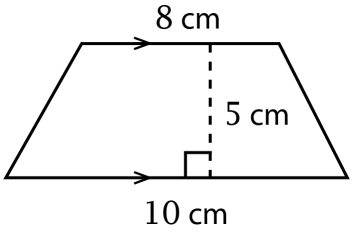

Area = $\square$ cm^2

Copyright © Maths Pathway 2025.

Worked Example for Standard Questions

Calculate the area of the trapezium.

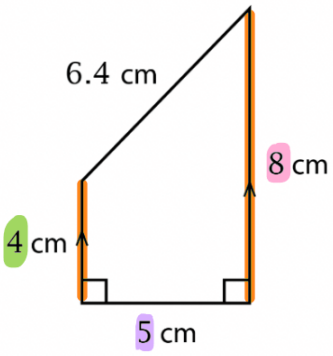

a and b are the sides that are parallel

$$A = \frac{1}{2} \times (a+b) \times h$$

$$= \frac{1}{2} \times (4+8) \times 5$$

$$= 30 \text{ cm}^2$$

Area = 30 cm^2

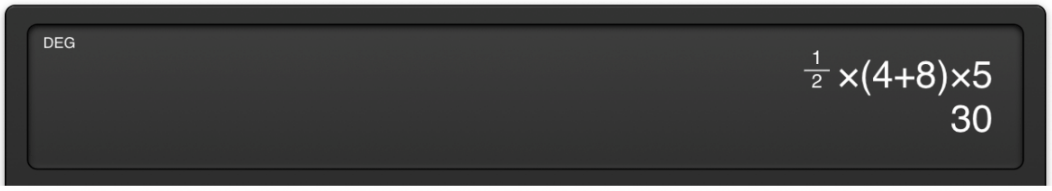

Copyright © Maths Pathway 2025.

Question 6

The area of a trapezium is given by:

$$A = \frac{1}{2}(a+b)h$$

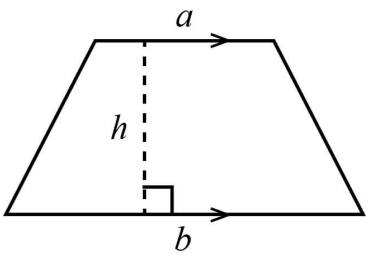

Calculate the area of the trapezium.

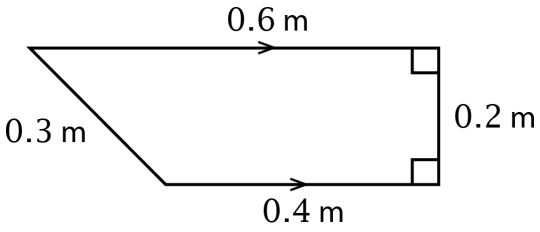

Area = $\square$ m^2

Copyright © Maths Pathway 2025.

Area of a Trapezium

Question 7

The area of a trapezium is given by:

$$A = \frac{1}{2}(a+b)h$$

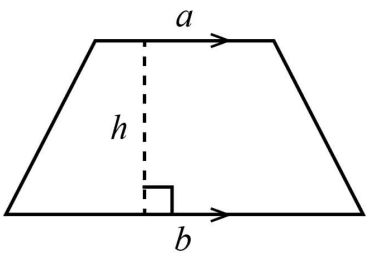

Calculate the area of the trapezium.

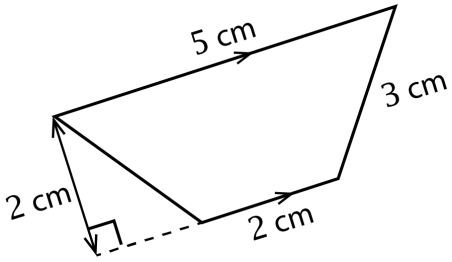

Area = $\square$ cm^2

Copyright © Maths Pathway 2025.

Question 8

The area of a trapezium is given by:

$$A = \frac{1}{2}(a+b)h$$

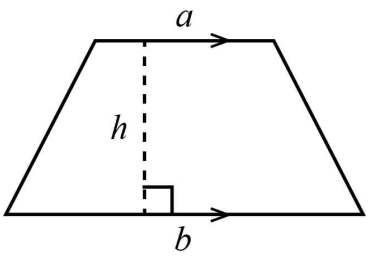

Calculate the area of the trapezium.

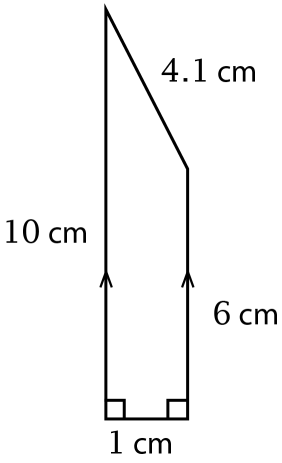

Area = $\square$ cm^2

Copyright © Maths Pathway 2025.

Area of a Trapezium

Question 9

The area of a trapezium is given by:

$$A = \frac{1}{2}(a+b)h$$

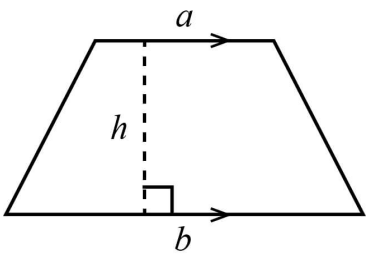

Calculate the area of the trapezium.

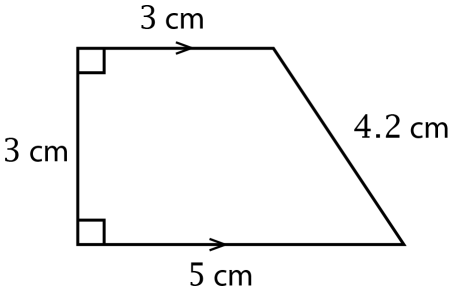

Area = $\square$ cm^2

Copyright © Maths Pathway 2025.

Area of a Trapezium

Question 10

The area of a trapezium is given by:

$$A = \frac{1}{2}(a+b)h$$

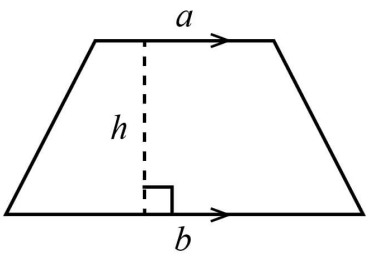

Calculate the area of the trapezium.

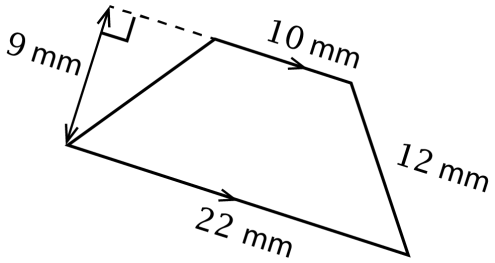

Area = $\square$ mm^2

Copyright © Maths Pathway 2025.

Ex 8.3

A scientific calculator is permitted throughout this exercise.

Worked Example for Simple Questions

The circumference of a circle is given by:

$$\text{Circumference} = \pi \times \text{diameter}$$

$$C = \pi d$$

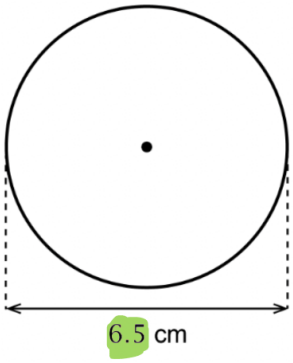

$C = \pi d$
$= \pi \times 6.5$
≈ 20.42

The circumference of this circle to **two** decimal places?

A	B	C
38.49 cm	15.78 cm	20.42 cm



Copyright © Maths Pathway 2025.

Circumference of a Circle

Question 1

The circumference of a circle is given by:

$$\text{Circumference} = \pi \times \text{diameter}$$

$$C = \pi d$$

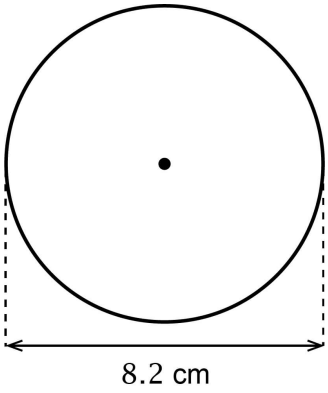

The circumference of this circle to **two** decimal places is:

Circle the correct option

A

18.44 cm

B

5.39 cm

C

25.76 cm

Question 2

The circumference of a circle is given by:

$$\text{Circumference} = \pi \times \text{diameter}$$

$$C = \pi d$$

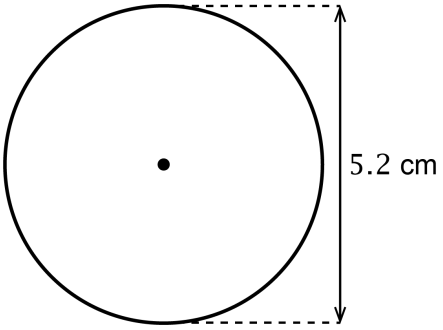

The circumference of this circle to **two** decimal places is:

Circle the correct option

A

8.40 cm

B

16.34 cm

C

25.66 cm

Copyright © Maths Pathway 2025.

Circumference of a Circle

Question 3

The circumference of a circle is given by:

$$\text{Circumference} = \pi \times \text{diameter}$$

$$C = \pi d$$

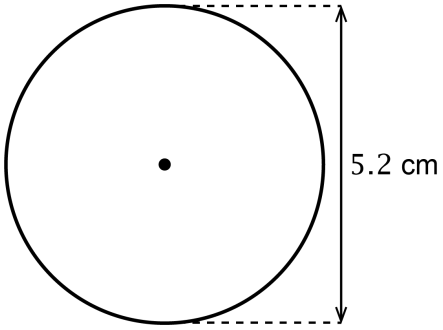

The circumference of this circle to **two** decimal places is:

Circle the correct option

A

16.34 cm

B

25.39 cm

C

35.76 cm

Question 4

The circumference of a circle is given by:

$$\text{Circumference} = \pi \times \text{diameter}$$

$$C = \pi d$$

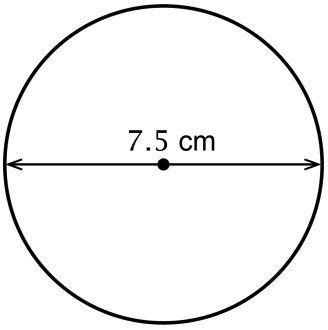

The circumference of this circle to **two** decimal places is:

Circle the correct option

A

9.34 cm

B

15.29 cm

C

23.56 cm

Copyright © Maths Pathway 2025.

Question 5

The circumference of a circle is given by:

$$\text{Circumference} = \pi \times \text{diameter}$$

$$C = \pi d$$

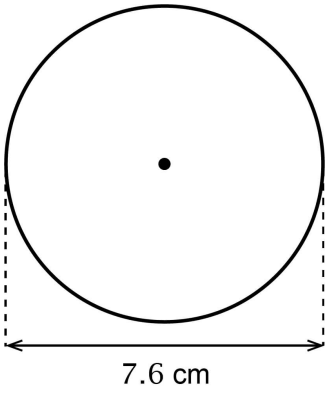

The circumference of this circle to **two** decimal places is:

Circle the correct option

A

23.88 cm

B

34.56 cm

C

108.57 cm

Copyright © Maths Pathway 2025.

Worked Example for Standard Questions

The circumference of a circle is given by:

$$\text{Circumference} = \pi \times \text{diameter}$$

$$C = \pi d$$

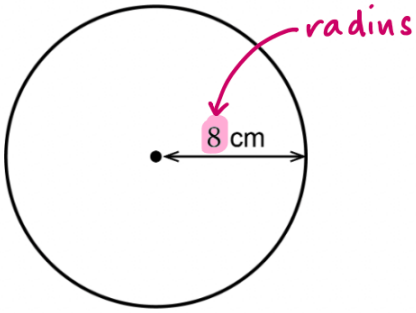

$r = 8$ cm

$d = 2 \times 8 = 16$ cm

$C = \pi d$

$= \pi \times 16$

$= 50.265\ldots$

≈ 50.27 cm

Calculate the circumference of this circle, correct to two decimal places.

Circumference $=$ 50.27 cm

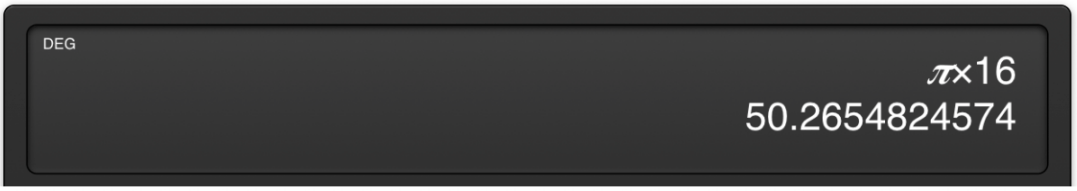

Copyright © Maths Pathway 2025.

Circumference of a Circle

Question 6

The circumference of a circle is given by:

$$\text{Circumference} = \pi \times \text{diameter}$$

$$C = \pi d$$

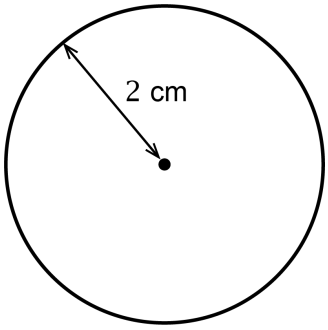

Calculate the circumference of this circle, correct to two decimal places.

Circumference $=$ $\square$ cm

Question 7

The circumference of a circle is given by:

$$\text{Circumference} = \pi \times \text{diameter}$$

$$C = \pi d$$

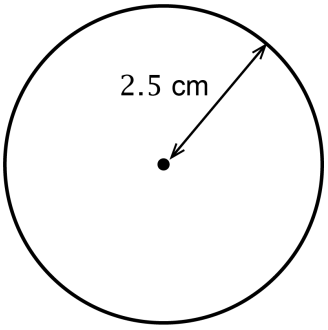

Calculate the circumference of this circle, correct to two decimal places.

Circumference $=$ $\square$ cm

Copyright © Maths Pathway 2025.

Circumference of a Circle

Question 8

The circumference of a circle is given by:

$$\text{Circumference} = \pi \times \text{diameter}$$

$$C = \pi d$$

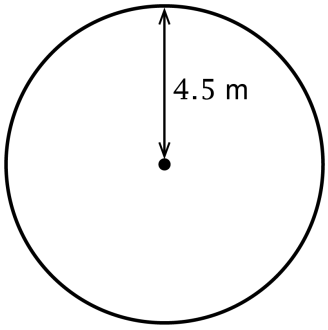

Calculate the circumference of this circle, correct to two decimal places.

Circumference $=$ $\square$ m

Question 9

The circumference of a circle is given by:

$$\text{Circumference} = \pi \times \text{diameter}$$

$$C = \pi d$$

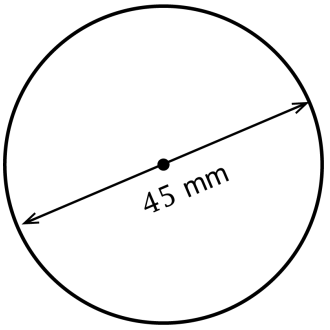

Calculate the circumference of this circle, correct to two decimal places.

Circumference $=$ $\square$ mm

Copyright © Maths Pathway 2025.

Circumference of a Circle

Question 10

The circumference of a circle is given by:

$$\text{Circumference} = \pi \times \text{diameter}$$

$$C = \pi d$$

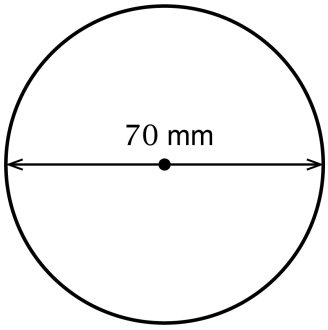

Calculate the circumference of this circle, correct to two decimal places.

Circumference $=$ $\square$ mm

Copyright © Maths Pathway 2025.

A scientific calculator is permitted throughout this exercise.

Ex 8.5

Worked Example for Simple Questions

The area of a circle is given by:

$$\text{Area} = \pi \times (\text{radius})^2$$

$$A = \pi r^2$$

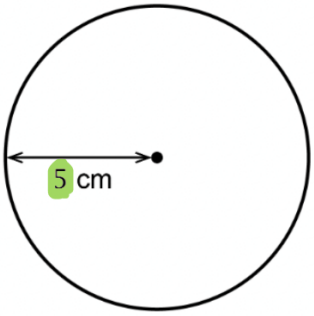

$A = \pi \times r^2$

$= \pi \times 5^2$

$\approx 78.54\ \text{cm}^2$

The **area** of this circle, correct to two decimal places, is:

A	B	C
$108.14\ \text{cm}^2$	$78.54\ \text{cm}^2$	$26.34\ \text{cm}^2$

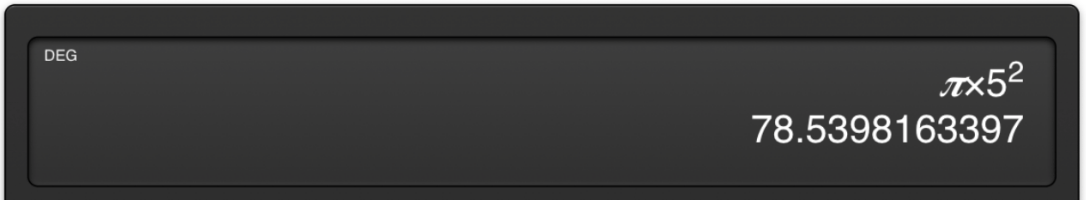

Copyright © Maths Pathway 2025.

Area of a Circle

Question 1

The area of a circle is given by:

$$\text{Area} = \pi \times (\text{radius})^2$$

$$A = \pi r^2$$

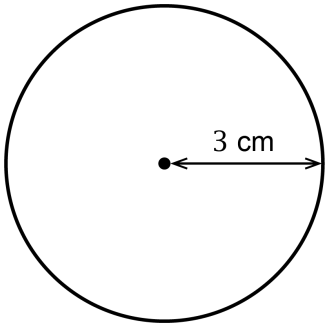

The **area** of this circle, correct to two decimal places, is:

Circle the correct option

A

19.03 cm^2

B

28.27 cm^2

C

32.15 cm^2

Question 2

The area of a circle is given by:

$$\text{Area} = \pi \times (\text{radius})^2$$

$$A = \pi r^2$$

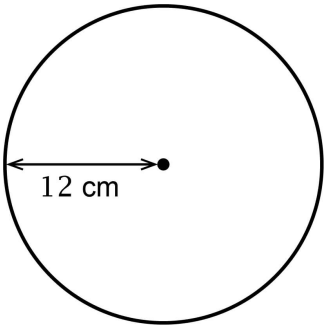

The **area** of this circle, correct to two decimal places, is:

Circle the correct option

A

452.39 cm^2

B

512.63 cm^2

C

602.35 cm^2

Copyright © Maths Pathway 2025.

Area of a Circle

Question 3

The area of a circle is given by:

$$\text{Area} = \pi \times (\text{radius})^2$$

$$A = \pi r^2$$

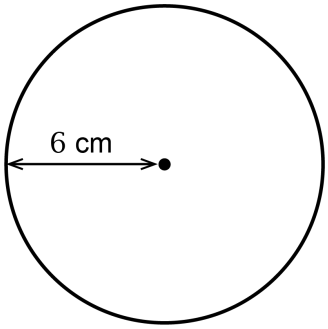

The **area** of this circle, correct to two decimal places, is:

Circle the correct option

A

$96.03\ \text{cm}^2$

B

$104.36\ \text{cm}^2$

C

$113.10\ \text{cm}^2$

Question 4

The area of a circle is given by:

$$\text{Area} = \pi \times (\text{radius})^2$$

$$A = \pi r^2$$

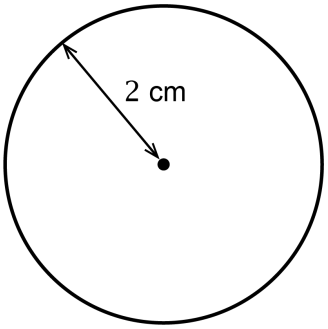

The **area** of this circle, correct to two decimal places, is:

Circle the correct option

A

$8.06\ \text{cm}^2$

B

$12.57\ \text{cm}^2$

C

$16.41\ \text{cm}^2$

Copyright © Maths Pathway 2025.

Question 5

The area of a circle is given by:

$$\text{Area} = \pi \times (\text{radius})^2$$

$$A = \pi r^2$$

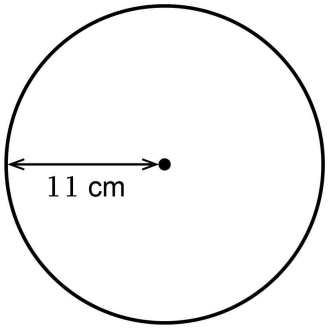

The **area** of this circle, correct to two decimal places, is:

Circle the correct option

A

$298.07\ \text{cm}^2$

B

$321.11\ \text{cm}^2$

C

$380.13\ \text{cm}^2$

Copyright © Maths Pathway 2025.

Worked Example for Standard Questions

The area of a circle is given by:

$$\text{Area} = \pi \times (\text{radius})^2$$

$$A = \pi r^2$$

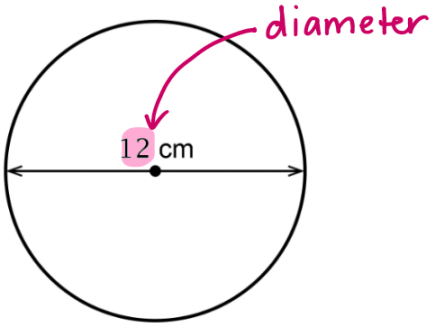

$d = 12$ cm

$r = 12 \div 2 = 6$ cm

$A = \pi r^2$

$= \pi \times 6^2$

$= 113.097...$

≈ 113.10 cm^2

Calculate the **area** of this circle, correct to two decimal places.

Area = 113.10 cm^2

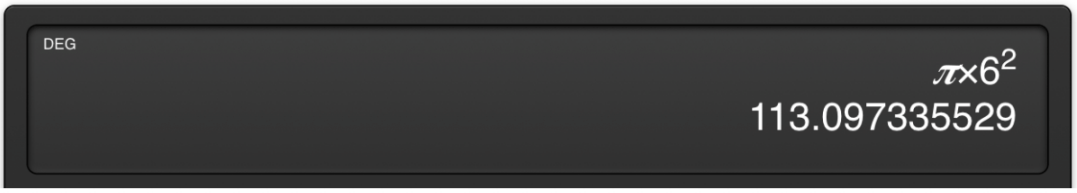

Copyright © Maths Pathway 2025.

Area of a Circle

Question 6

The area of a circle is given by:

$$\text{Area} = \pi \times (\text{radius})^2$$

$$A = \pi r^2$$

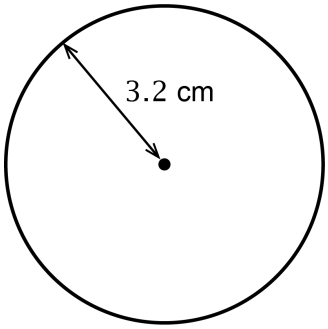

Calculate the **area** of this circle, correct to two decimal places.

Area = $\square$ cm^2

Question 7

The area of a circle is given by:

$$\text{Area} = \pi \times (\text{radius})^2$$

$$A = \pi r^2$$

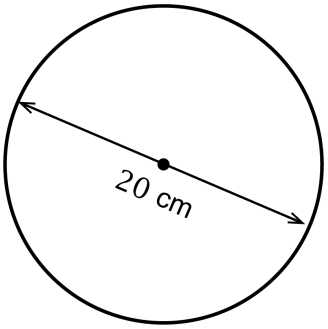

Calculate the **area** of this circle, correct to two decimal places.

Area = $\square$ cm^2

Copyright © Maths Pathway 2025.

Area of a Circle

Question 8

The area of a circle is given by:

$$\text{Area} = \pi \times (\text{radius})^2$$

$$A = \pi r^2$$

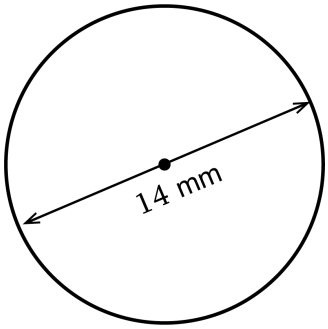

Calculate the **area** of this circle, correct to two decimal places.

Area $=$ mm^2

Question 9

The area of a circle is given by:

$$\text{Area} = \pi \times (\text{radius})^2$$

$$A = \pi r^2$$

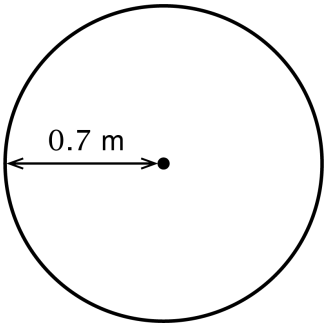

Calculate the **area** of this circle, correct to two decimal places.

Area $=$ m^2

Copyright © Maths Pathway 2025.

Area of a Circle

Question 10

The area of a circle is given by:

$$\text{Area} = \pi \times (\text{radius})^2$$

$$A = \pi r^2$$

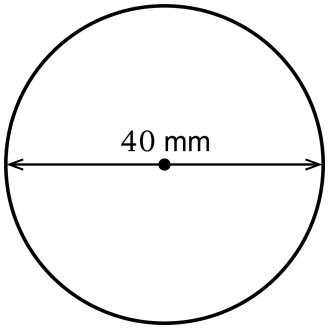

Calculate the **area** of this circle, correct to two decimal places.

Area $=$ $\square$ mm^2

Copyright © Maths Pathway 2025.

Perimeter of Composite Shapes

Ex 8.7

A calculator is permitted throughout this exercise.

Worked Example for Simple Questions

Calculate the **perimeter** of the shape.

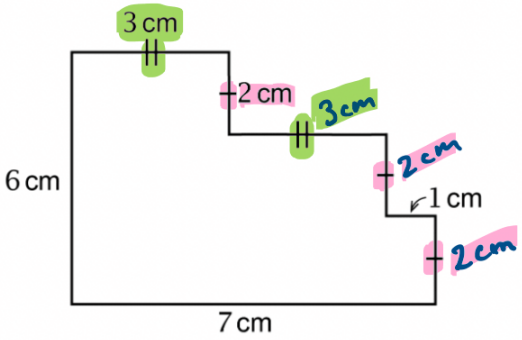

$P = 6 + 3 + 2 + 3 + 2 + 1 + 2 + 7$

$= 26$ cm

Perimeter $=$ 26 cm

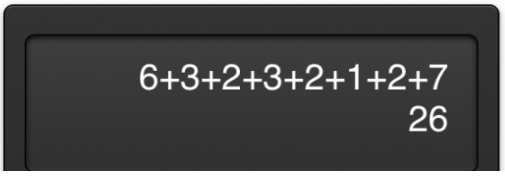

Question 1

Calculate the **perimeter** of the shape.

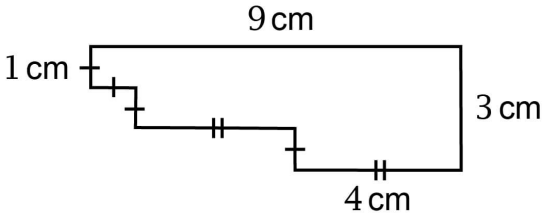

Perimeter $=$ $\square$ cm

Question 2

Calculate the **perimeter** of the shape.

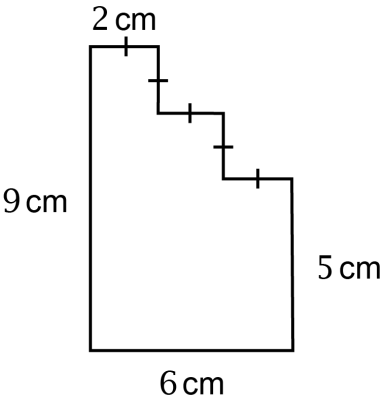

Perimeter $=$ $\square$ cm

Copyright © Maths Pathway 2025.

Perimeter of Composite Shapes

Question 3

Calculate the **perimeter** of the shape.

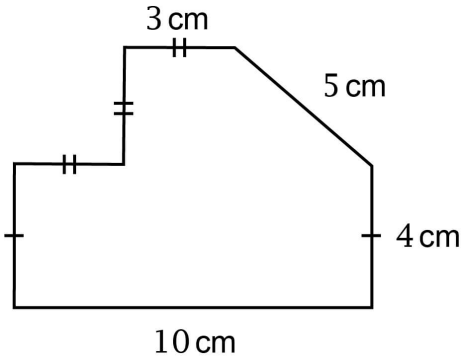

Perimeter = ☐ cm

Question 4

Calculate the **perimeter** of the shape.

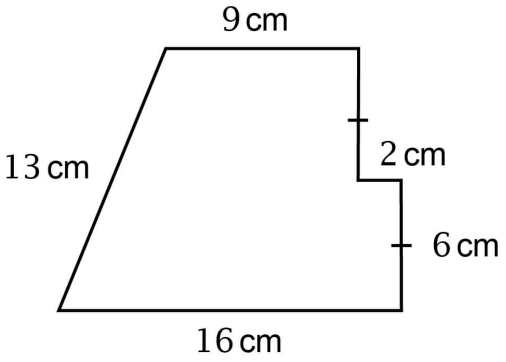

Perimeter = ☐ cm

Question 5

Calculate the **perimeter** of the shape.

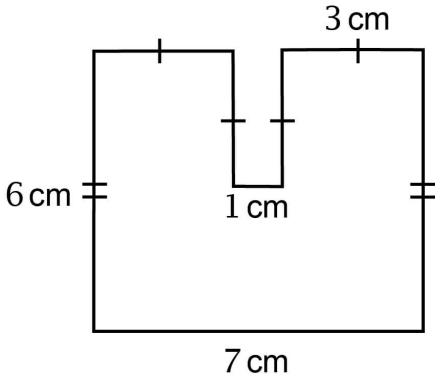

Perimeter = ☐ cm

Copyright © Maths Pathway 2025.

Perimeter of Composite Shapes

Worked Example for Standard Questions

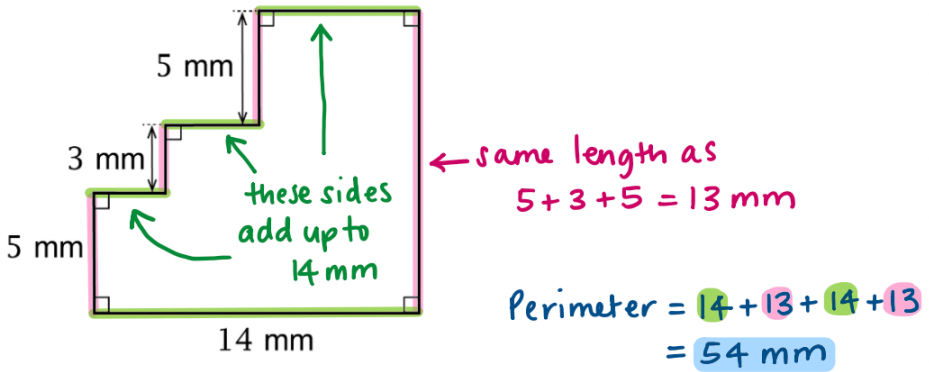

The **perimeter** of this shape is 54 centimetres.

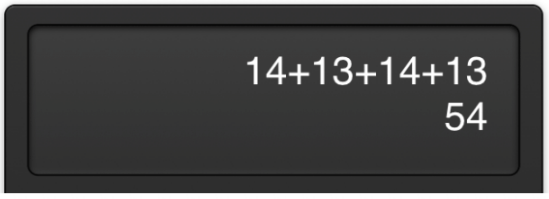

Question 6

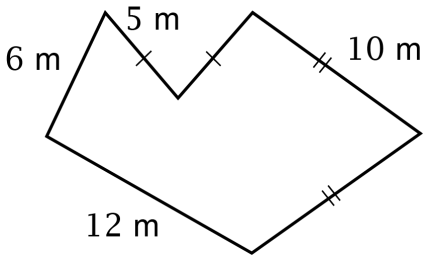

The **perimeter** of this shape is _____ metres.

Question 7

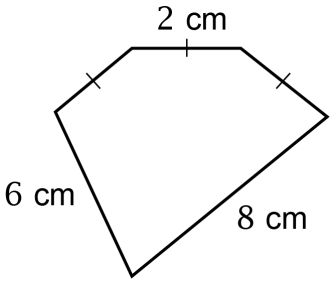

The **perimeter** of this shape is _____ centimetres.

Copyright © Maths Pathway 2025.

Perimeter of Composite Shapes

Question 8

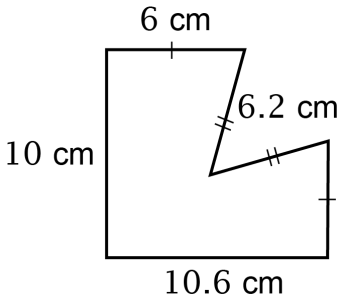

The **perimeter** of this shape is ☐ centimetres.

Question 9

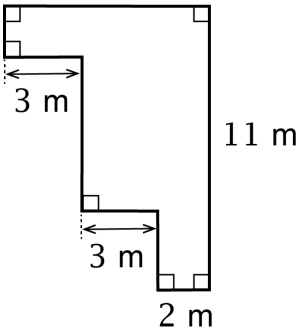

The **perimeter** of this shape is ☐ metres.

Question 10

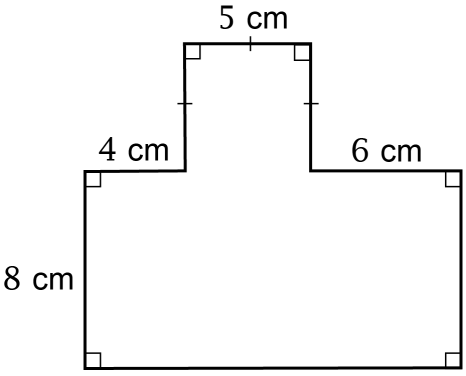

The **perimeter** of this shape is ☐ centimetres.

Copyright © Maths Pathway 2025.

Ex 8.9

A calculator is permitted throughout this exercise.

Worked Example for Simple Questions

Calculate the area of the following shape.

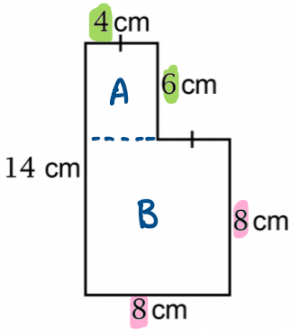

Area = A + B
= l × w + l × w
= 6 × 4 + 8 × 8
= 88 cm²

Area = 88 cm^2

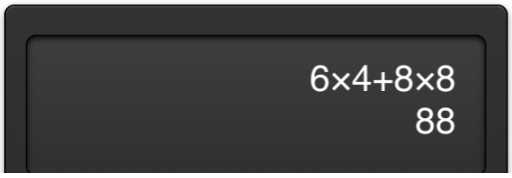

Copyright © Maths Pathway 2025.

Area of Composite Shapes

Question 1

Calculate the area of the following shape.

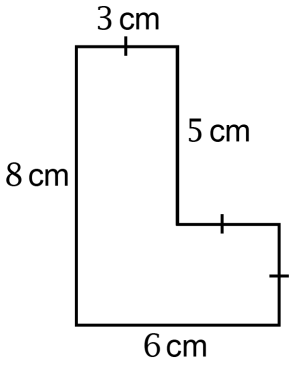

Area = $\square$ cm^2

Question 2

Calculate the area of the following shape.

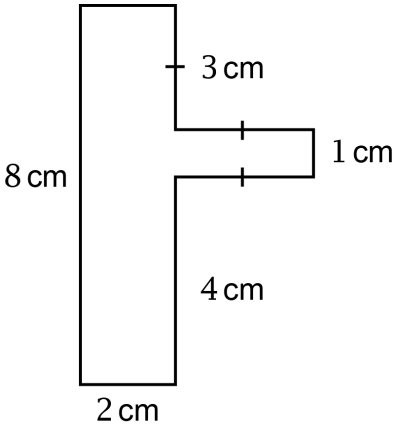

Area = $\square$ cm^2

Question 3

Calculate the area of the following shape.

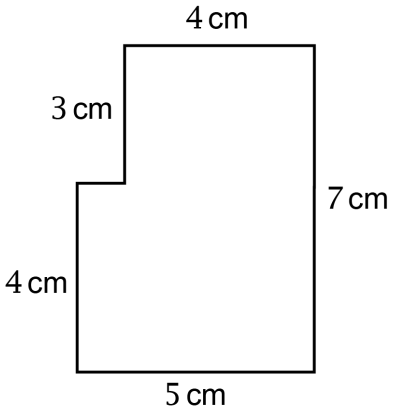

Area = $\square$ cm^2

Question 4

Calculate the area of the following shape.

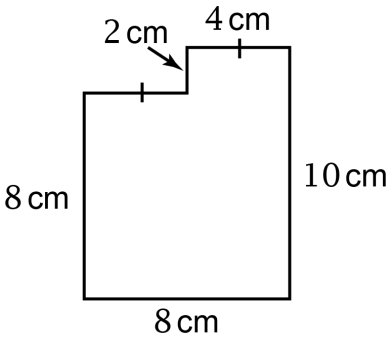

Area = $\square$ cm^2

Copyright © Maths Pathway 2025.

Area of Composite Shapes

Question 5

Calculate the area of the following shape.

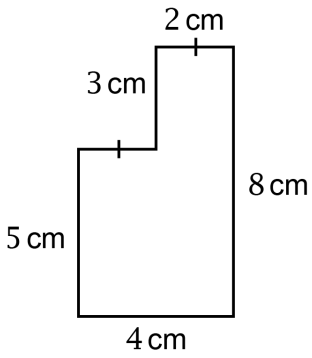

Area = $\square$ cm^2

Copyright © Maths Pathway 2025.

Worked Example for Standard Questions

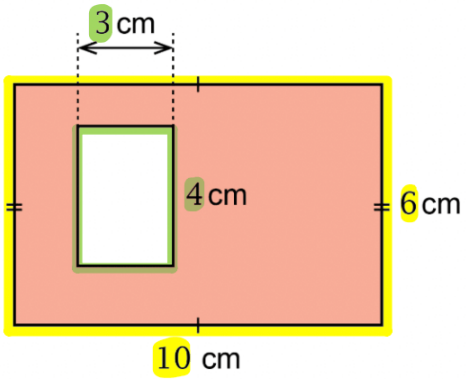

The shaded area can be found by subtracting the area of the inner shape from the area of the outer shape.

$A = 6 \times 10 - 3 \times 4$
$= 60 - 12$
$= 48 \text{ cm}^2$

The **shaded area** is 48 cm^2.

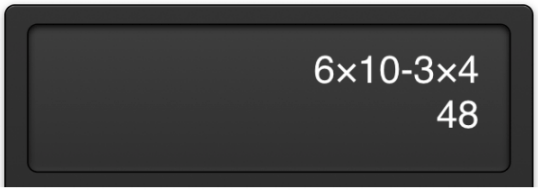

Copyright © Maths Pathway 2025.

Area of Composite Shapes

Question 6

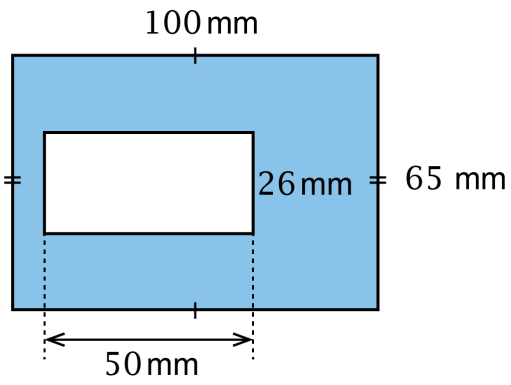

The **shaded area** is ____ mm^2.

Question 7

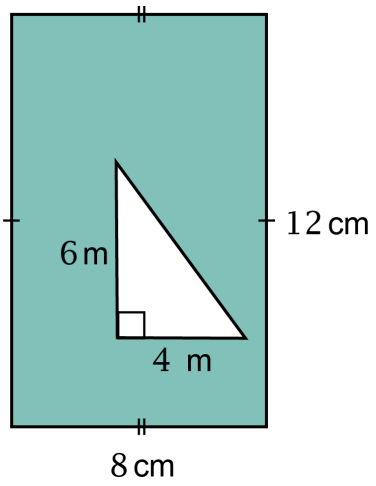

The **shaded area** is ____ cm^2.

Question 8

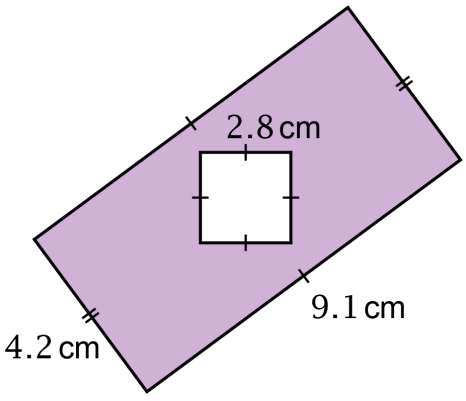

The **shaded area** is ____ cm^2.

Question 9

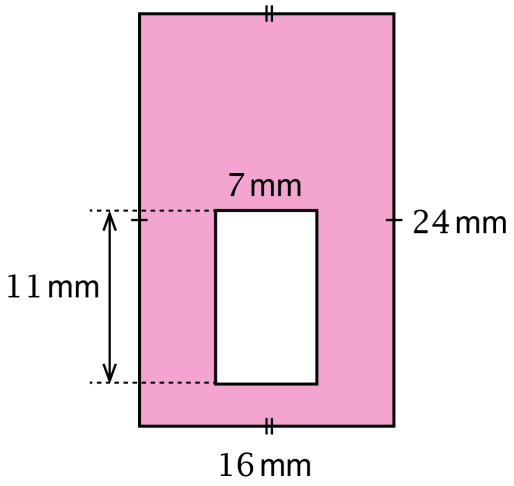

The **shaded area** is ____ mm^2.

Copyright © Maths Pathway 2025.

Question 10

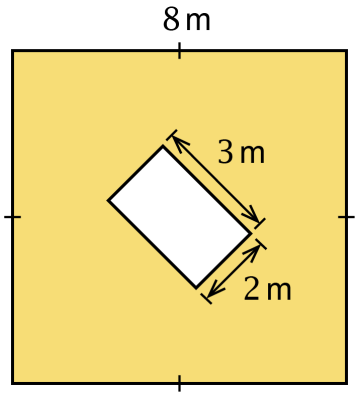

The **shaded area** is $\square$ m^2.

Copyright © Maths Pathway 2025.

Ex 8.11

A calculator is permitted throughout this exercise.

Worked Example for Simple Questions

Calculate the volume of the prism.

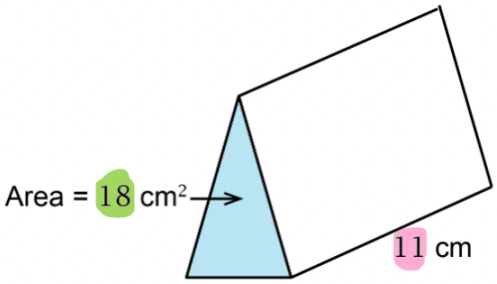

Volume = Area of end × depth
= 18 × 11
= 198 cm³

Volume = 198 cm^3



Question 1

Calculate the volume of the prism.

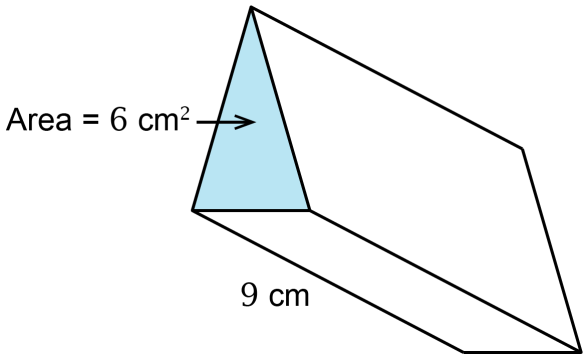

Volume = $\square$ cm^3

Question 2

Calculate the volume of the prism.

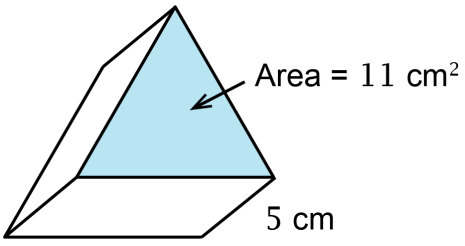

Volume = $\square$ cm^3

Copyright © Maths Pathway 2025.

Volume of Prisms in General

Question 3

Calculate the volume of the prism.

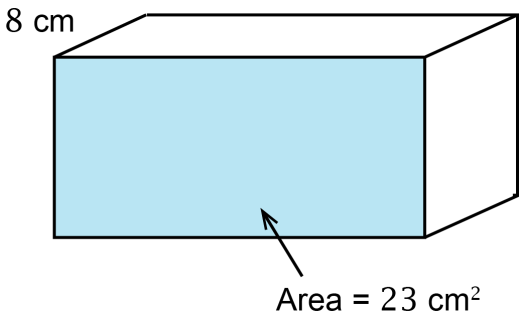

Volume = $\square$ cm^3

Question 4

Calculate the volume of the prism.

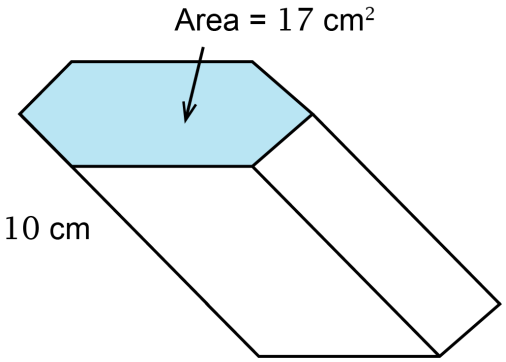

Volume = $\square$ cm^3

Question 5

Calculate the volume of the prism.

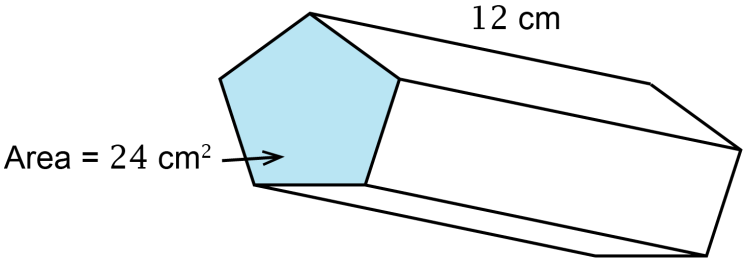

Volume = $\square$ cm^3

Copyright © Maths Pathway 2025.

Worked Example for Standard Questions

Calculate the volume of this prism, correct to one decimal place.

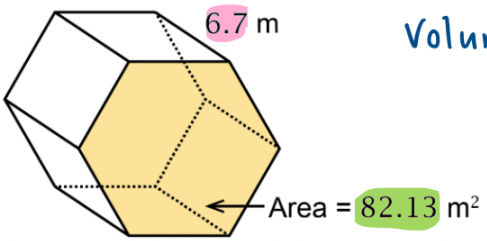

Volume = Area of end × depth
= 82.13 × 6.7
= 550.271 ← 7 means round up
≈ 550.3 m³

Volume = 550.3 m^3

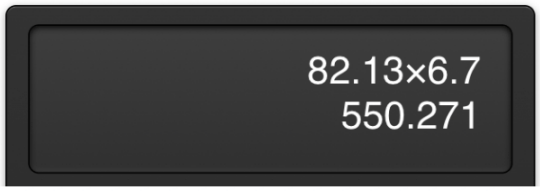

Question 6

Calculate the volume of this prism, correct to one decimal place.

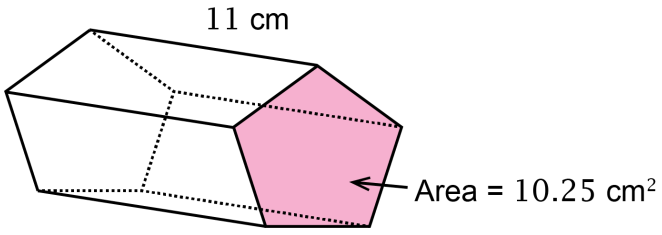

Volume = $\square$ cm^3

Question 7

Calculate the volume of this prism, correct to one decimal place.

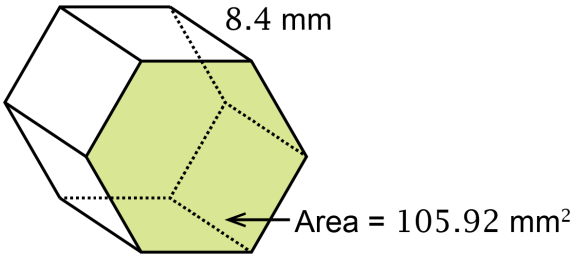

Volume = $\square$ mm^3

Copyright © Maths Pathway 2025.

Volume of Prisms in General

Question 8

Calculate the volume of this prism, correct to one decimal place.

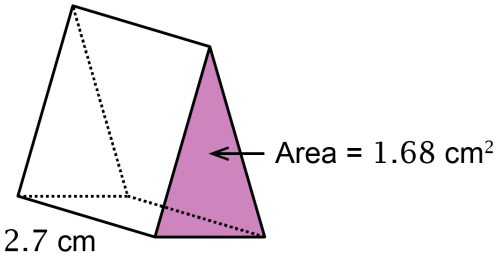

Volume = $\square$ cm^3

Question 9

Calculate the volume of this prism, correct to one decimal place.

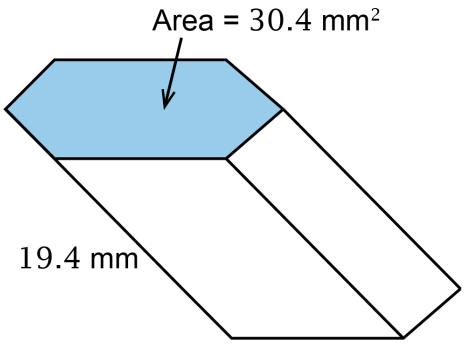

Volume = $\square$ mm^3

Question 10

Calculate the volume of this prism, correct to one decimal place.

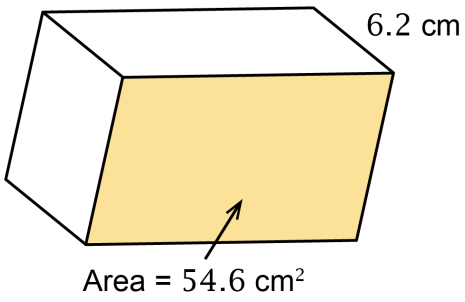

Volume = $\square$ cm^3

Copyright © Maths Pathway 2025.